Transformer and Channel ad hoc

November 2007

Fred Schindler

Cisco Systems

Alan Linda	**Pulse**
Andrew Smith	**Power Integration**
Anoop Vetteth	**Cisco Systems**
Dan Dove	**HP Procurve Networking**
David Law	**3COM**
Fred Schindler	**Cisco Systems**
Geoff Thompson	**Nortel Networks**
Hugh Barrass	**Cisco Systems**
Jeff H.	**Halo**
Joe Berry	**Bel**
Johnny Chen	**Molex**
Joseph Maggiollino	**Broadcom**
Mark M.	**Pulse**
Matthew Landry	**Silicon Labs**
Mohamad	**Pulse**
Peter Liu	
Ramesh Sastry	**Cisco Systems**
Steve Sedio	**Foxconn**
Terry Cobb	**Systimax**
Thuyen Dinh	**Pulse**
Victor Renteria	**Pulse**

1 ad hoc with an average attendance of 21 people since the last IEEE meeting.
People that attended since the last IEEE meeting are shown in **bold.**

Agenda

- **Review the IEEE 802.3 channel model**
- **Ad Hoc recommendations**
- **Current unbalance**
- **Current unbalance affect on the transformer**
- **Next step.**

IEEE 802.3 Channel Model

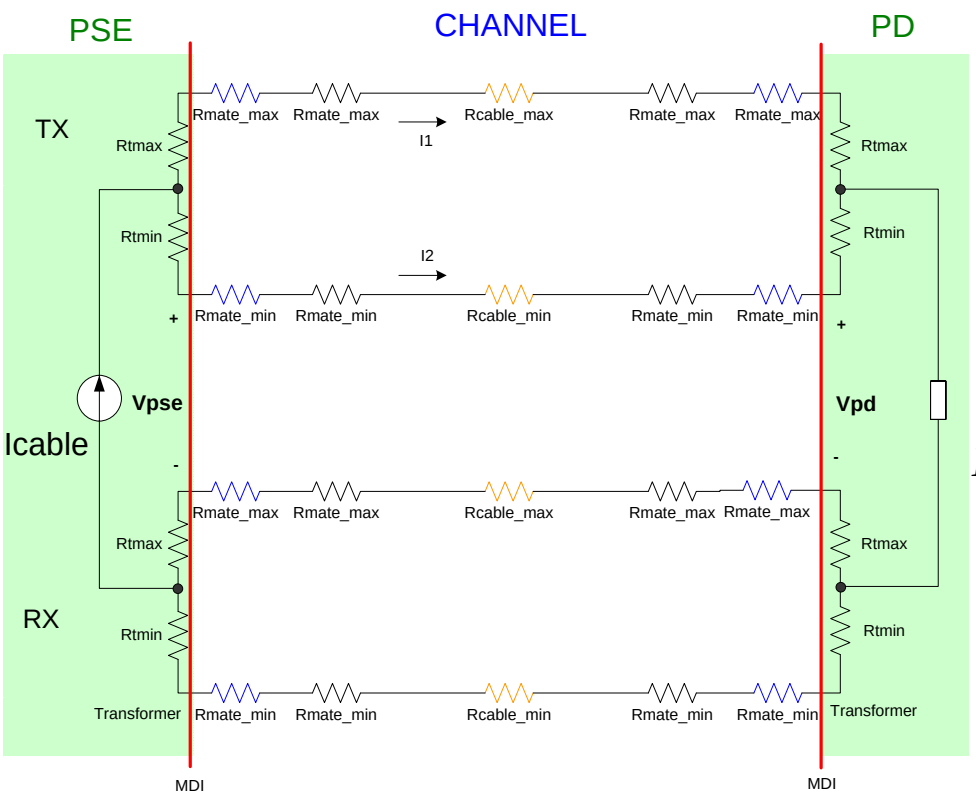

$$I_1 = I_{cable} \frac{\sum R_{\max} // \sum R_{\min}}{\sum R_{\max}}$$

$$I_2 = I_{cable} \frac{\sum R_{\max} // \sum R_{\min}}{\sum R_{\min}}$$

$$I_{UNBAL} = I_{cable} \times \sum R_{\max} // \sum R_{\min} \left(\frac{1}{\sum R_{\min}} - \frac{1}{\sum R_{\max}}\right)$$

$$I_{UNBAL} = 350mA \times 3\% = 10.5mA$$

Max. average current

Iunb

Max. channel unbalance resistance

The worst-case current unbalance is simulated by placing all the maximum resistance values in one conductor path and all the minimum resistance values in the other conductor path of the same pair.

a // b => Replace with the resistance of “a” in parallel with “b”.

IEEE 802.3 Current unbalance

Table 33-5

					MAX.		
15	Current unbalance	I_{unb}	mA		10.5	1	See 33.2.8.12

33.2.8.12 Current unbalance

The specification for I_{unb} in Table 33–5 shall apply to the current unbalance between the two conductors of a power pair over the current load range. The ~~10.5 mA value is~~ values are based on a simulated output current unbalance of 3%.

m	ohm	ohm	ohm	ohm	ohm	ohm		ohm	ohm	mA
Length	Cable Max Res.	Cable Min. Res. (2% unbal)	Conn. Unbalance	Conn. Resistance	Chan Max Res.	Chan Min Res.	Chan Res. Unbalance	Transformer Res Max	Transformer Unbalance	Current Unbalance
85	8.08	7.76	0.2	0.80	9.38	8.83	3.00%	0.50	0.03	10.51

- **Assumed constant Icable = 350 mA. 10.5/350 = 3%**
- **Length of cable 85 m.**
- **Rconductor = 19 ohms/100m, IEC 61156-5, math done as if Rloop = 19 ohms**
- **Resistance unbalance 2%, IEC 61156-5, (Rmax – Rmin)/(Rmax + Rmin)**
- **CAT-5e connectors and plugs**
- **Transformer resistance on one side of the channel only.**

IEEE 802.3 used data based on that analysis shown at:
http://grouper.ieee.org/groups/802/3/at/public/jan06/diminico_1_0106.pdf

The above spreadsheet was created by Tony Hwang, and matches the data of the referenced presentation.

Spreadsheet duplication of 802.3 data

Parameter	Min.	Max.	Unit	Standard
Rmate		0.2	ohm	IEC 60512-2, Test 2a
Rmate_diff		0.05	ohm	IEC 60512-2, Test 2a
Rcable_loop	16	19	ohm	IEC 11801
Rcable_cond_diff		2%		IEC 11801

Current Imbalance Estimator				
Parameter	**Min.**	**Max.**	**Unit**	**Description**
Length		85	m	
PI current 2-pair		350	mA	
Rcable	7.76	8.08	ohm	Conductor resistance for the specified length.
Number of connectors		4	RJ-45 connectors in the channel.	
Connector resistance		0.8	ohm	One conductor path..
Connection diff.		0.2	ohm	One conductor path..
Channel resistance	8.36	8.88	ohm	One conductor path..
Channel typical resistance estimate	8.62		ohm	One conductor path..
Transformers in the channel		1		
Transformer resistance	0.47	0.5	ohm	
Trans. Res. Unbalance		3%		See Misc. section for alternate values.
Channel resistance inc. trans.	8.83	9.38	ohm	Transformer is on both sides of the channel.
Channel res. unbalance		**3.0%**		**Signal pairs with a transformer.**
Pair current unbalance		**10.5**	**mA**	
Channel typical resistance estimate	9.1		ohms	
PSE to PD channel resistance est.	**8.1**		**ohms**	Used for simplistic IEEE PSE-to-PD system.
Pair conductor current	345	355	mA	
Single pair voltage error at MDI		5.10	mV	Voltage across the transformer cable side.

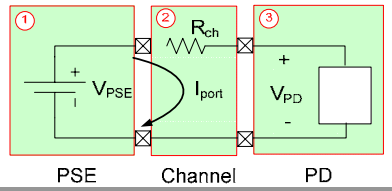

The PSE voltage is 44. The PD power 14.4 W.

Ad hoc recommendations (in-process)

- **Use ISO/IEC 11801, 3% resistive unbalance and Rloop recommendations (Class-C 40 ohms, Class-D 25 ohms)**
  Still need to sort-out Rloop for a cable vs a channel.
- **When cable reach is < 30 m assume 2 connectors**
  When cable reach is >= 30 m assume 4 connectors
- **Assume CAT-5e connectors or better are used on PSEs and PDs.**
- **When a CAT-3 connector is mated with a higher grade plug use CAT-3 resistance values.**
- **Use 0.5 ohms maximum for transformer resistance (CT-to-signal) with a 5% resistive unbalance.**
- **Assume the cable reach is at least 1 m and that all lengths are used.**
- **Calculate cable current based on system parameters.**
- **Constant Power PD.**
- **Transformers in the PSE and PD.**

Spreadsheet with intended 802.3 data

Parameter	Min.	Max.	Unit	Standard
Rmate		0.2	ohm	IEC 60512-2, Test 2a, Class-D
Rmate		0.3	ohm	TIA/EIA-596B.2, 5.4.8 CAT-3
Rmate_diff		0.05	ohm	IEC 60512-2, Test 2a, Class-D
Rcable_loop	16	40	ohm	IEC 11801 **Dominates at long cable lengths.**
Rcable_cond_diff		3%		IEC 11801

Was 19

Was 2%

Current Imbalance Estimator				
Parameter	**Min.**	**Max.**	**Unit**	**Description**
Length		100	m	
PI current 2-pair		352	mA	
Rcable	18.83	20.00	ohm	Conductor resistance for the specified length.
Number of connectors		0	RJ-45 connectors in the channel.	
Connector resistance	**Class-D**	0	ohm	One conductor path..
Connection diff.		0	ohm	One conductor path..
Number of connectors		4	RJ-45 connectors in the channel.	
Connector resistance	**CAT-3**	1.2	ohm	One conductor path..
Connection diff.		0.2	ohm	One conductor path..
Channel resistance	19.83	21.20	ohm	One conductor path..
Channel typical resistance estimate	20.52		ohm	One conductor path..
Transformers in the channel		2		
Transformer resistance	0.45	0.5	ohm	
Trans. Res. Unbalance		5%		See Misc. section for alternate values.
Channel resistance inc. trans.	20.74	22.20	ohm	Transformer is on both sides of the channel.
Channel res. unbalance		**3.4%**		**Signal pairs with a transformer.**
Pair current unbalance		**12.0**	**mA**	
Channel typical resistance estimate	21.5		ohms	
PSE to PD channel resistance est.	**20.5**		**ohms**	Used for simplistic IEEE PSE-to-PD system.
Pair conductor current	346	358	mA	
Single pair voltage error at MDI		11.07	mV	Voltage across the transformer cable side.

Was 85

All were CAT5e

Dominates at short cable lengths.

Was 1

Was 3%

Was 8.1

The PSE voltage is 44 V. The PD power is 12.95 W.

This value is large than specified in IEEE 802.3: 3.0% and 10.5 mA.

Reference Specifications

ISO/IEC 11801-2002

1415 **6.4.7 Direct current (d.c.) loop resistance**

1416 The d.c. loop resistance of each pair of a channel shall meet the requirements in Table 16.

1417 When required, the d.c. loop resistance shall be measured according to IEC 61935-1.

1418 **Table 16 – Direct current (d.c.) loop resistance for channel**

Maximum d.c. loop resistance Ω					
Class A	Class B	Class C	Class D	Class E	Class F
560	170	40	25	25	25

1419 **6.4.8 Direct current (d.c.) resistance unbalance**

1420 The d.c. resistance unbalance between the two conductors within each pair of a channel shall
1421 not exceed 3 % for all classes. This shall be achieved by design.

Table 36 - Input to output resistance

Electrical characteristics	Frequency	Requirement			Test standard
		Connector category			
		5	6	7	
Maximum input to output resistance [a] mΩ	d.c.	200	200	200	IEC 60512-2 Test 2a

[a] Input to output resistance is a separate measurement from the contact resistance measurements required in IEC 60603-7. Input to output resistance is measured from cable termination to cable termination to determine the connector's ability to transmit direct current and low frequency signals. Contact resistance measurements are used to determine mechanical and environmental performance of individual electrical connections. These requirements are applicable to each conductor and to the screen, when present.

Table 37 - Input to output resistance unbalance

Electrical characteristics	Frequency	Requirement			Test standard
		Connector category			
		5	6	7	
Maximum input to output [a] resistance unbalance mΩ	d.c.	50	50	50	IEC 60512-2 Test 2a

[a] Input to output resistance measurements are made from cable termination to cable termination.

?

Table A.15 – Direct current (d.c.) loop resistance for permanent link or CP link

Class	Maximum d.c. loop resistance Ω
A	530
B	140
C	34
D	(*L*/100)*22 + n*0,4
E	(*L*/100)*22 + n*0,4
F	(*L*/100)*22 + n*0,4

NOTE -
$L = L_{FC} + L_{CP}*Y$
L_{FC} = length of fixed cable (m)
L_{CP} = length of CP cord (where present) (m)
Y = the ratio of CP cable attenuation (dB/m) to fixed horizontal cable attenuation (dB/m) (see clause 13)
n = 2 for Configurations A, B and D
n = 3 for Configuration C

Table A.16 - Informative d.c. loop resistance for permanent link with maximum implementation

Maximum d.c. loop resistance Ω					
Class A	Class B	Class C	Class D	Class E	Class F
530	140	34	21	21	21

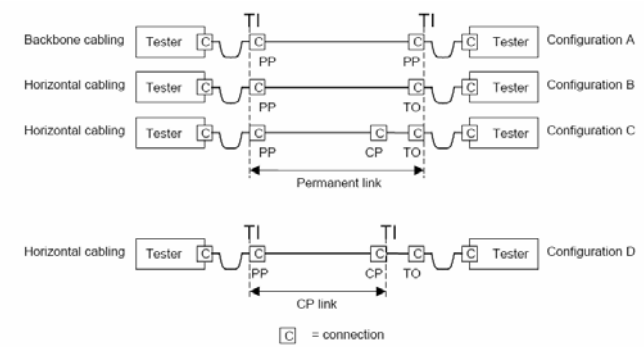

Figure A.1 - Link options

TIA/EIA-568-B.2

5.4.8 DC resistance

The DC resistance between the input and the output connections of the connecting hardware (not including the cable stub, if any) used to terminate 100 Ω twisted-pair cabling shall not exceed 0.3 Ω for category 3 connecting hardware and 0.2 Ω for category 5e connecting hardware at 20 °C ± 3°C when tested in accordance with ASTM D4566.

Present View of IEEE 802.3 unbalance current

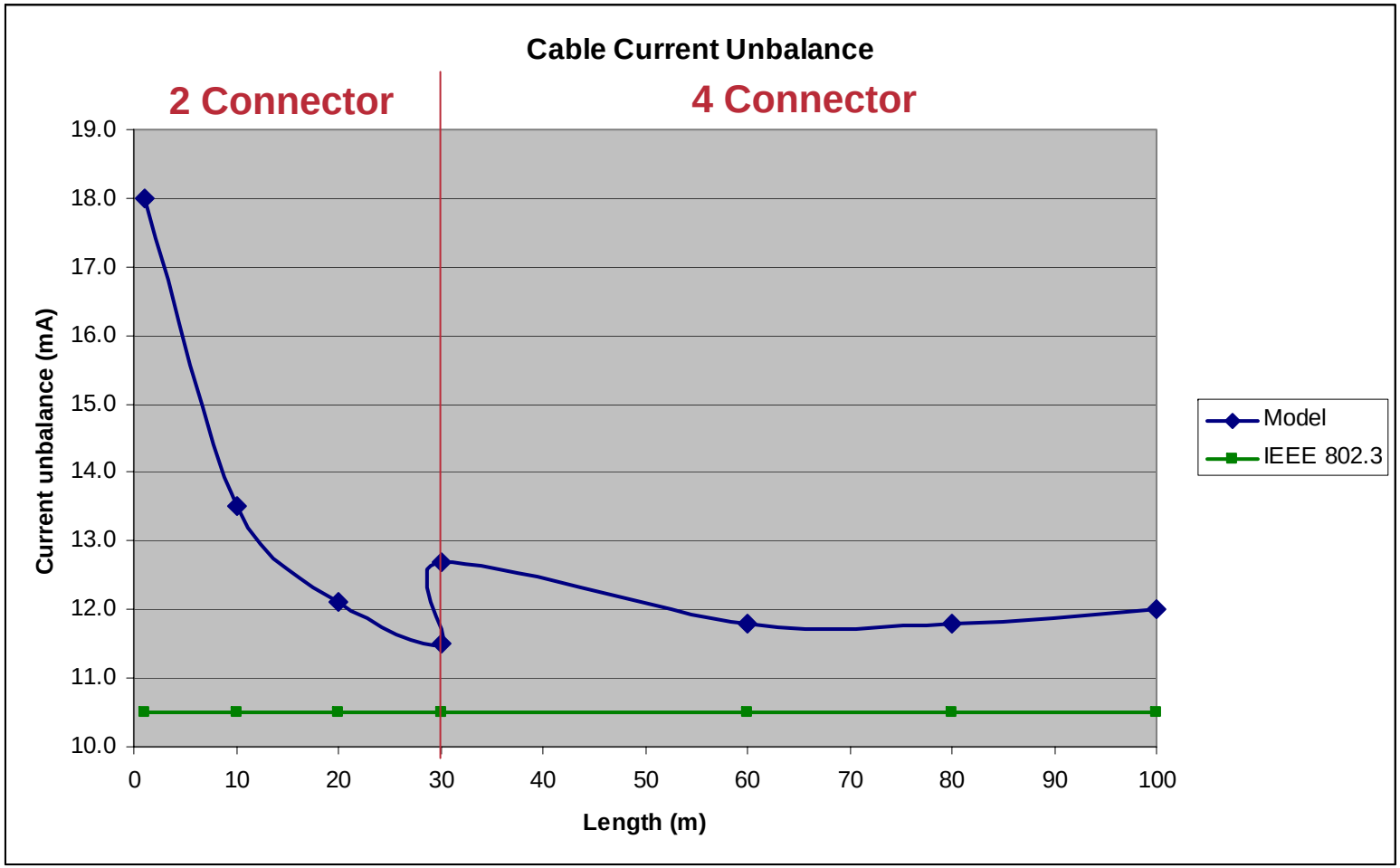

Unbalance Current Affect on the Transformer

$$I_{cable} = I_1 + I_2 = (I_{AVE} - I_{BIAS}) + (I_{AVE} - I_{BIAS}) = 2I_{AVE}$$

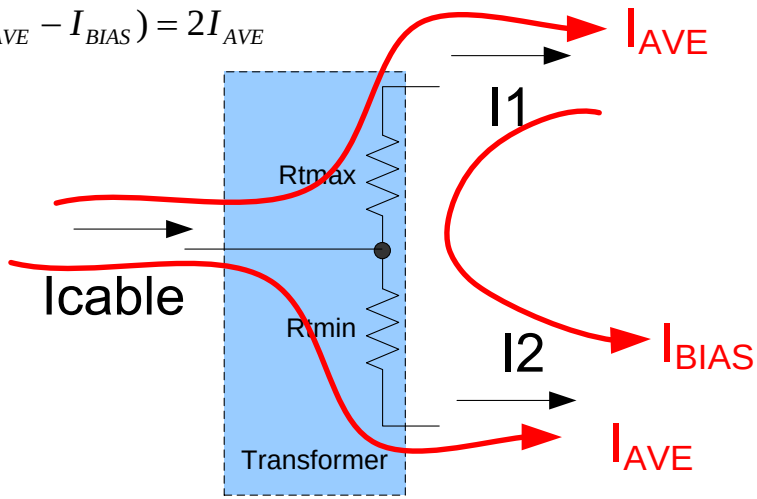

$$I_1 = I_{AVE} - I_{BIAS}$$

$$I_2 = I_{AVE} + I_{BIAS}$$

$$I_2 - I_1 = (I_{AVE} + I_{BIAS}) - (I_{AVE} - I_{BIAS}) = 2I_{BIAS}$$

$$\frac{I_2 - I_1}{2} = I_{BIAS}$$

100 MBPS Ethernet transformers support 8mA Bias current.

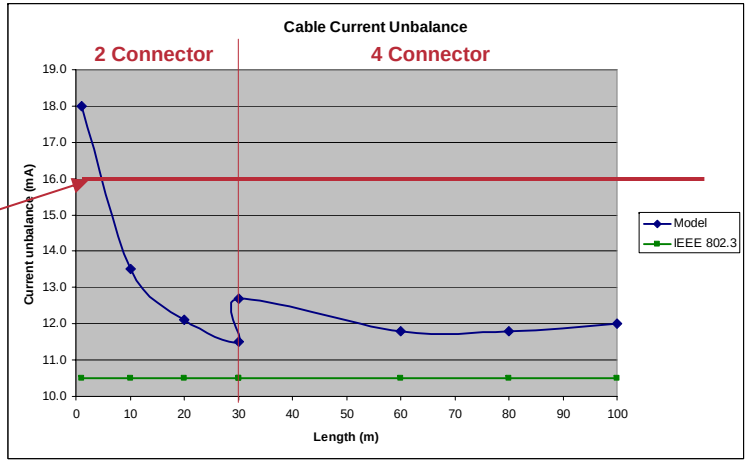

ANSI X3.263-1995 (TP-PMD)

- **Transformers used for 100 MBPS Ethernet are required to provide 350 uH inductance with a bias current of 0 to 8 mA.**
- **See David Law's Ad Hoc report for more details.**

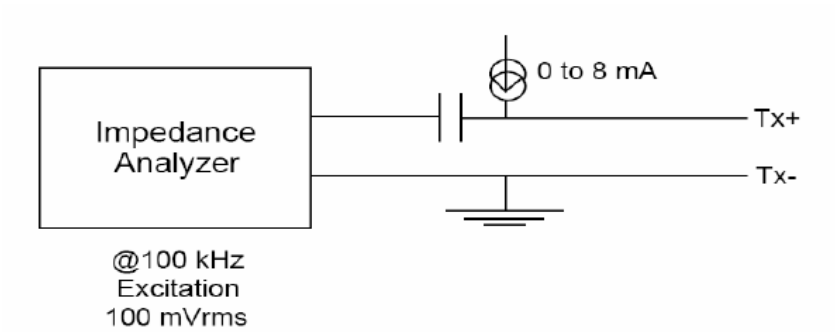

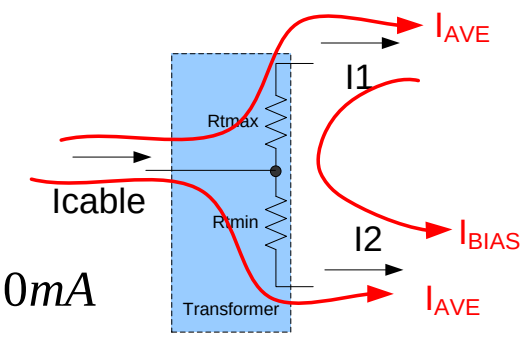

I_1 = -8 mA

I_1 = 8 mA

$$I_{cable} = I_2 + I_1 = 8 + (-8) = 0mA$$

$$\frac{I_2 - I_1}{2} = I_{BIAS} = \frac{8-(-8)}{2} = 8mA$$

Next Step

- **Review parameters selected for legacy PoE.**
- **Is worst-case probable?**
- **Select parameters for PoE plus.**