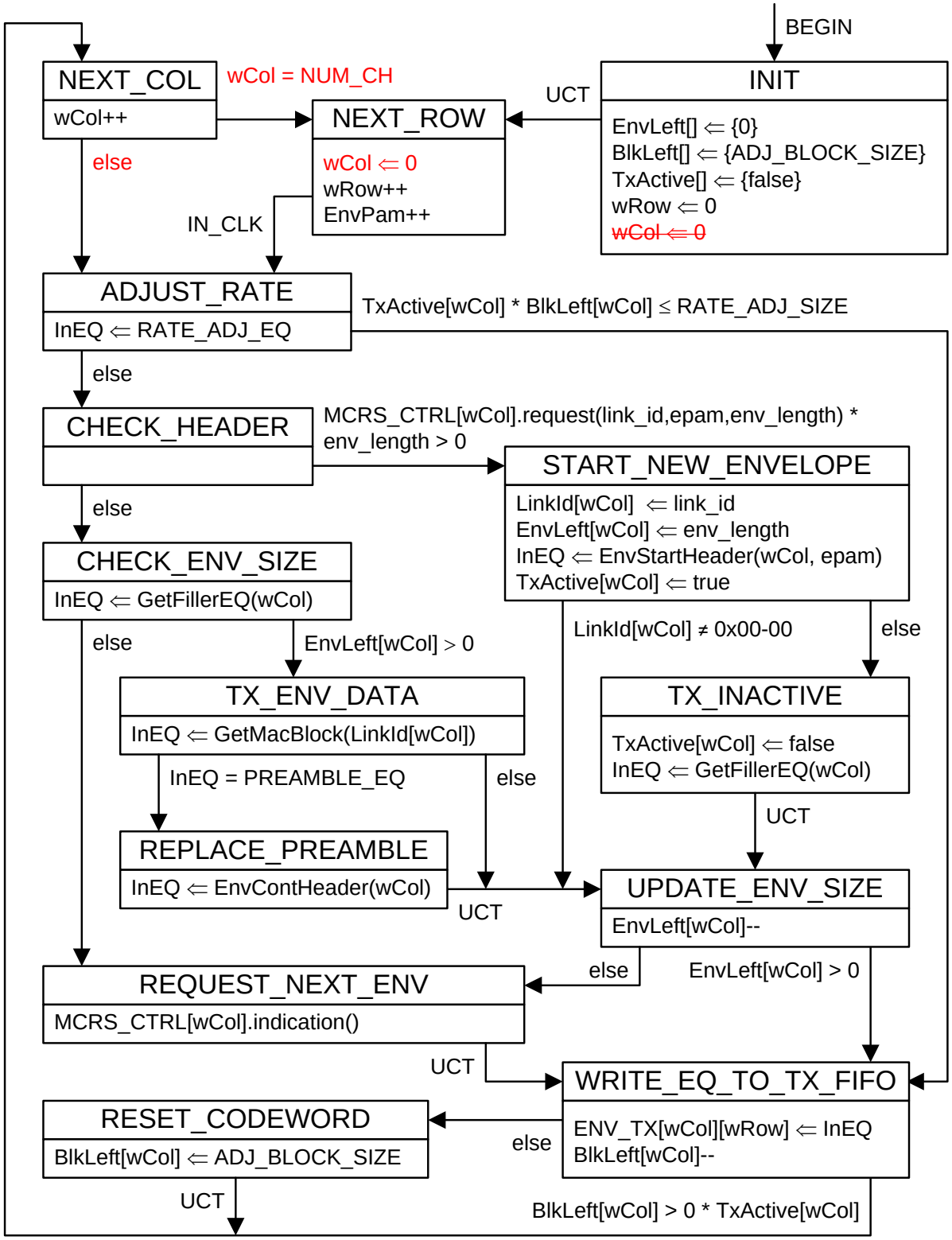

Figure 143-13

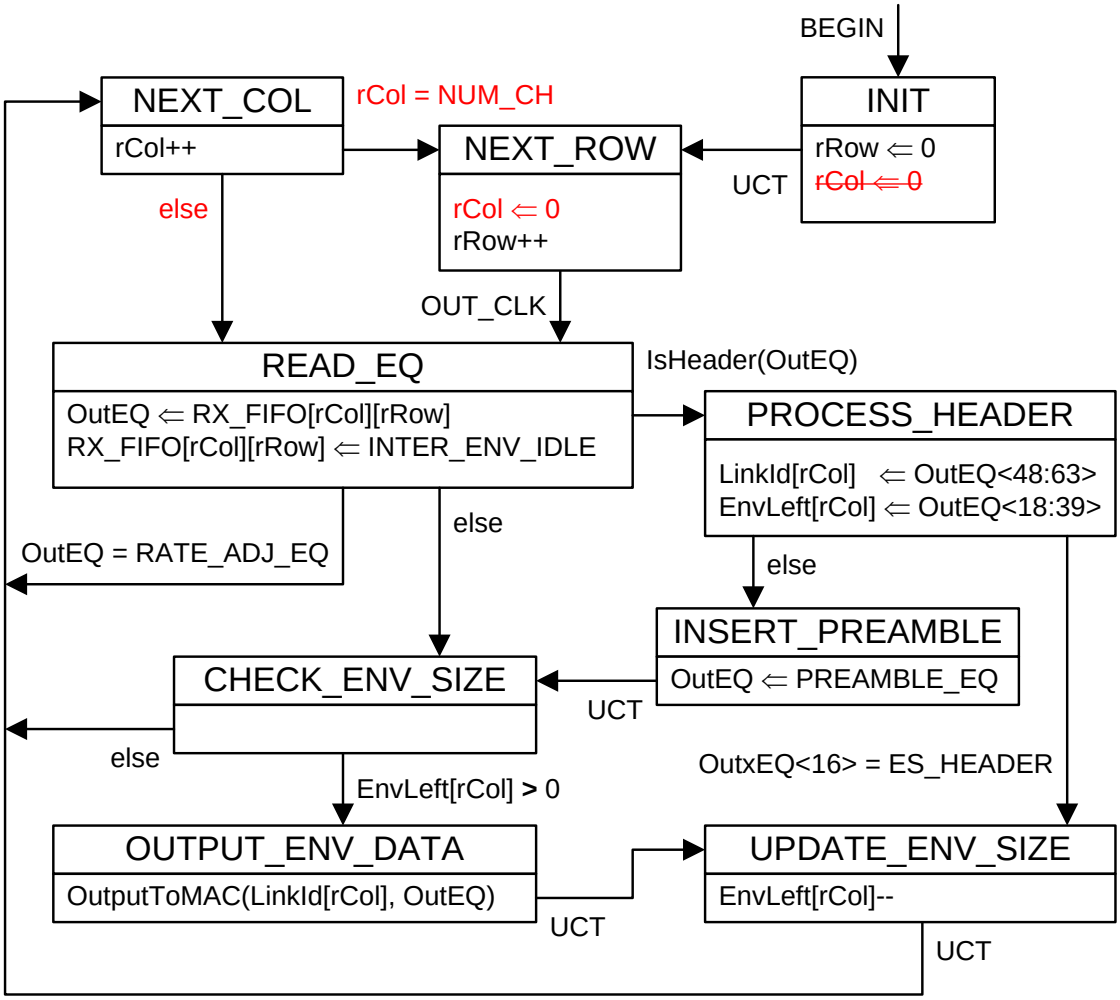

Figure 143-17