PoE Plus

2-PAIR vs. 4-PAIR

WHAT TO DO?

Clay Stanford
Linear Technology
PoE Plus
Austin
5-18-05

2-PAIR VS 4-PAIR POWER

- Committee must define complete, practical, and affordable solutions or ad hoc systems will flourish and dilute value of IEEE PoE Plus work.

- If committee leaves an inexpensive solution undefined, vendors will use this as a method to differentiate themselves by offering a cheaper high-power solution.

- If committee leaves a high-power system undefined, vendors will develop proprietary systems to fill the void.

- Our goal should be to come up with a standard that covers the complete range of applications in an economical way.

4-PAIR POWER

- PoE Plus has vowed to provide the maximum power within practical limits.
- Assuming that power delivery is ultimately limited by heating in the cable, this suggests that a 4-pair system is a necessary solution.
- In the case of maximum delivered power, 4-Pair PoE can deliver about 50% more power than a 2-Pair PoE system.
- This significant advantage of 4-Pair means that PoE Plus should define a 4-Pair PoE standard.
- However……..

4-PAIR POWER IS EXPENSIVE

4-Pair PoE incurs a significant increase in cost and complexity.

Complete 4-Pair system with dual PSE engines

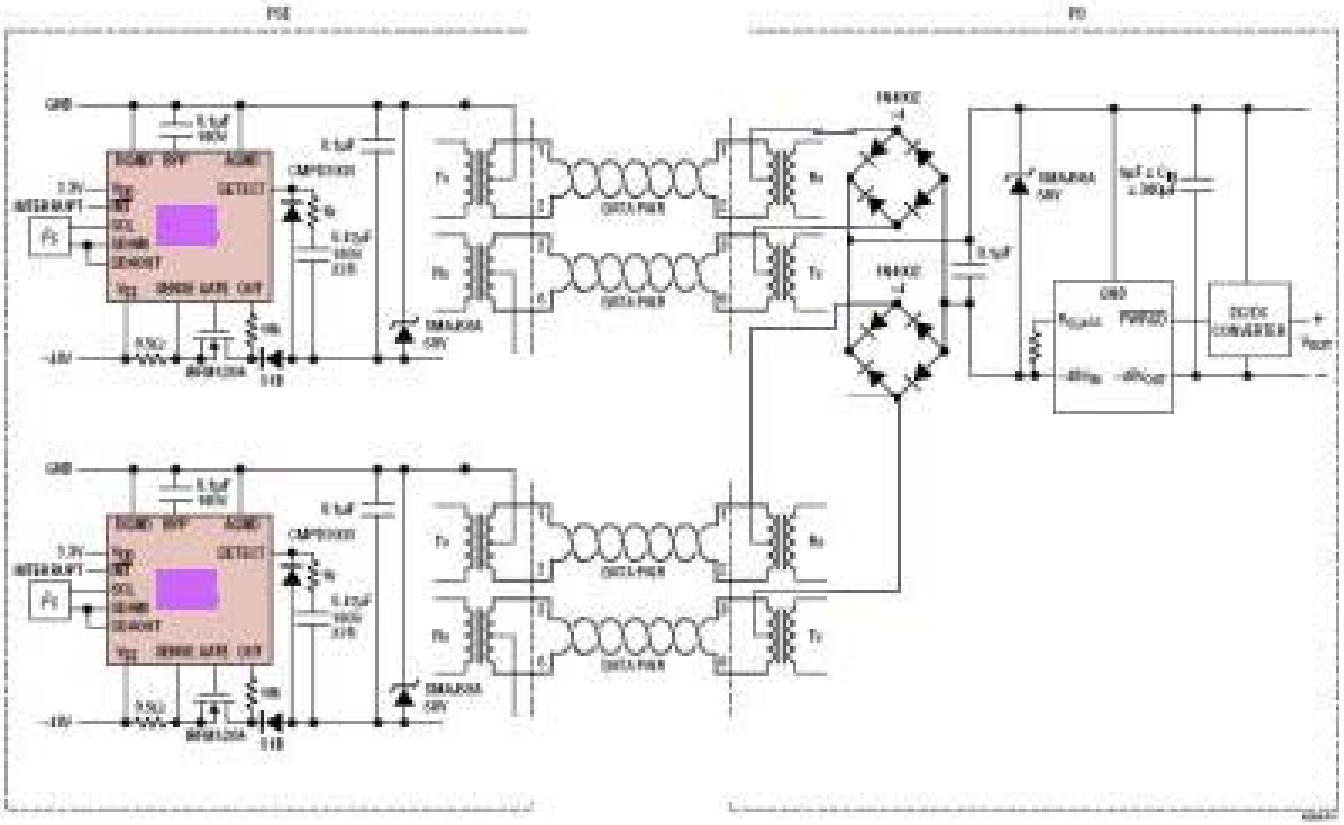

Note: This figure shows one possible method of configuring a 4-Pair system as an illustration. There is a multitude of configuration options.

4-PAIR SYSTEM MUST MAINTAIN CURRENT BALANCE

Simplified 4-Pair system showing balanced current flow.

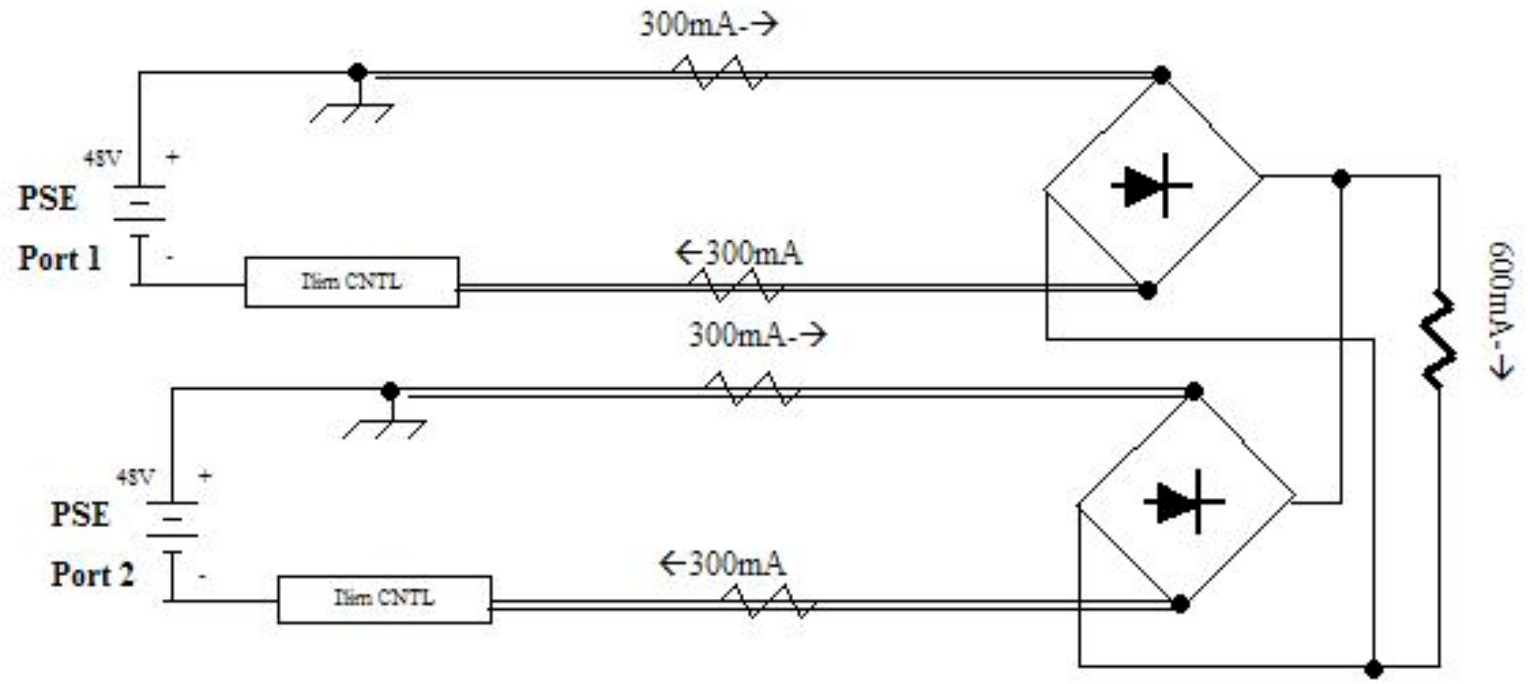

- In this system, current is balanced only because voltage and resistance of system are matched.

• CURRENT MISMATCH IN 4-PAIR SYSTEM

4-Pair system showing current mismatch problem.

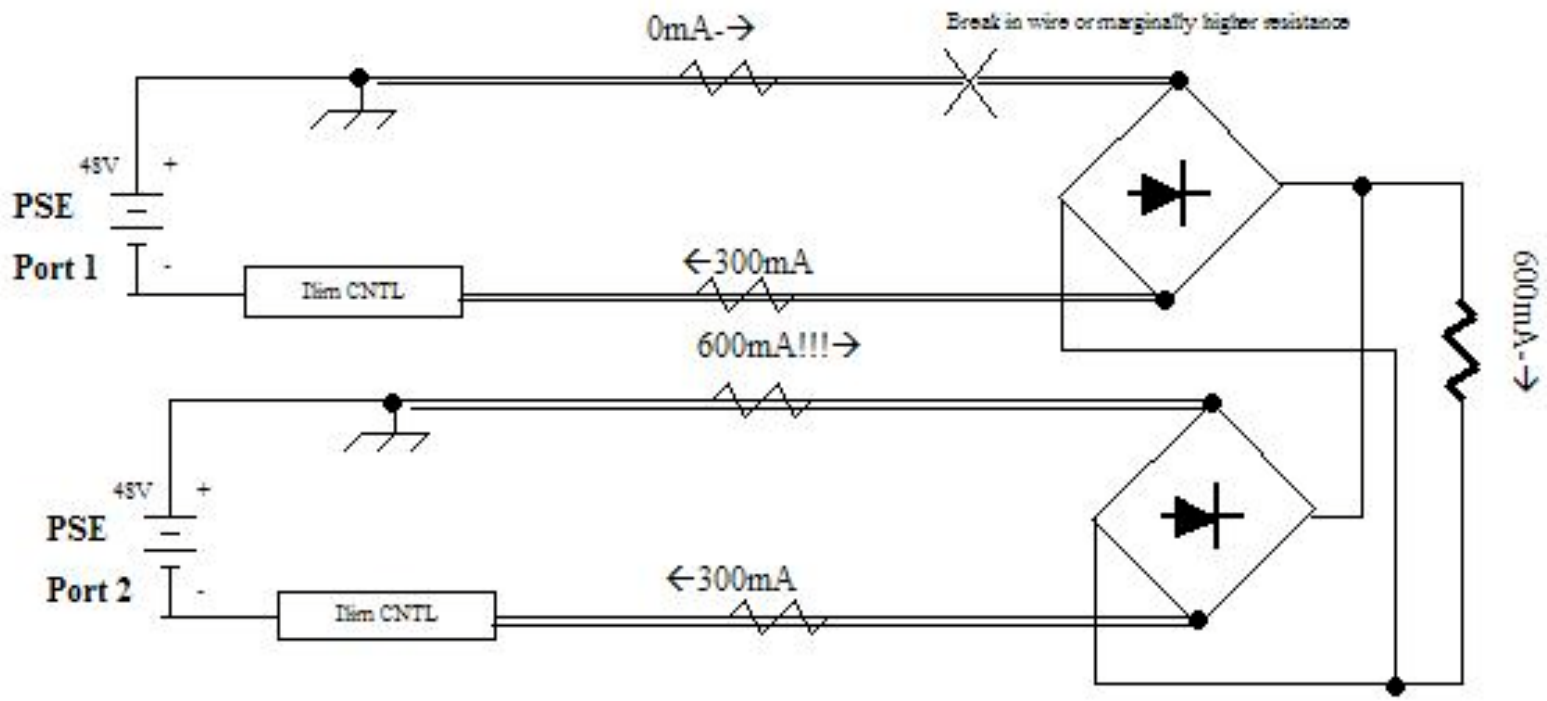

- System resistance mismatch of a just few ohms can offset current enough to throw one port into current limit, therefore shutting down PD.

• ACTIVE CURRENT BALANCING

4-Pair system with active current balancing.

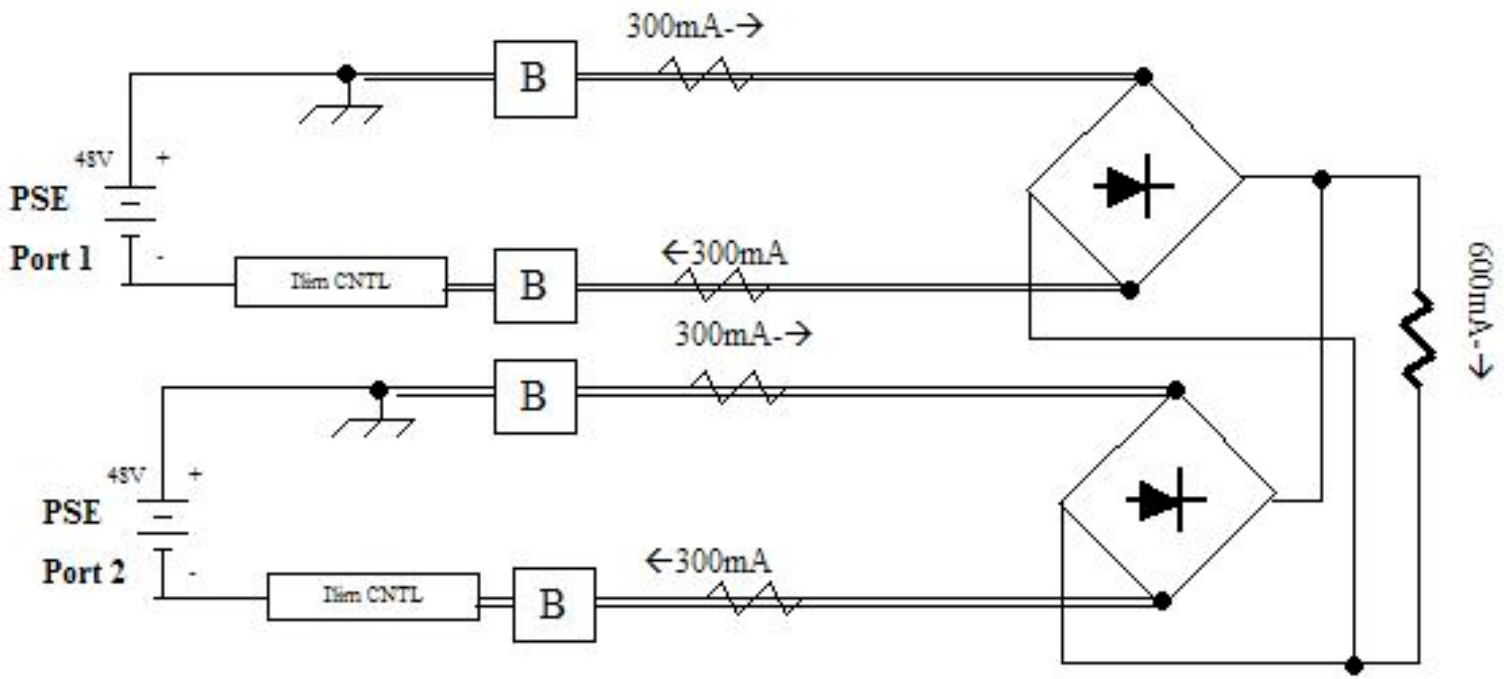

- 4-Pair system requires active balancing on **both the top and bottom** power supply rails.

Note: This example shows balancing performed in the PSE. Balancing can also be performed in the PD.

802.3 SHOULD DEFINE 4-PAIR SYSTEM

- 4-Pair system is expensive but has a place in the standard.
- Implementing 4-pair power at 802.3af (350mA) current levels would be the fastest route for the committee to take in order to get a higher power standard.
- This would be a mistake. It is not economically prudent, does not meet the stated goal of delivering maximum power, and would give rise to proprietary 2-Pair high power systems.
- PoE Plus should define a 4-Pair maximum power solution that is cost effective for high-end systems that can tolerate the additional expense required.

2-Pair Medium Power

- Assume it is agreed by the committee to define a 4-Pair maximum power solution for PoE Plus.
- QUESTION: Will the committee also define a 2-Pair medium power solution?

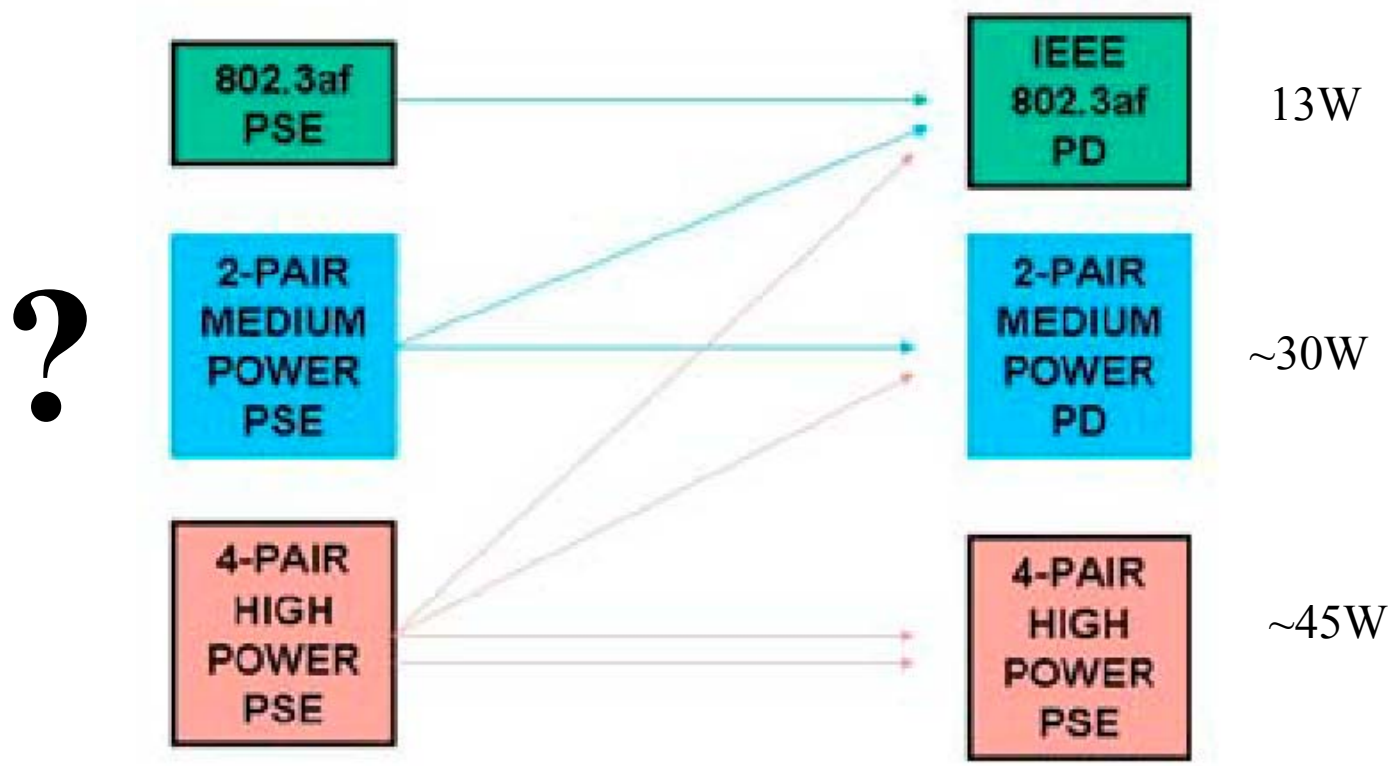

Three Options

OPTION	ALLOWABLE PSE TYPES	ALLOWABLE PD TYPES
4Ponly	4-Pair	4-Pair
2Pand4P	4-Pair	4-Pair and 2-Pair
2Por4P	4-Pair and 2-Pair	4-Pair and 2-Pair

802.3af hardware continues to be supported in all options.

- Will have at least 2 flavors of PSE, so issue of inter-operability will be present with either option.
- Guess that majority of PoE applications can be served with 30-watt power solution.
- If 2-Pair medium power is not defined, it will force PSE vendors to provide an expensive solution that will be used relatively rarely.
- Without defining 2-Pair medium power, risk ad hoc solutions will pollute the market place.

I THINK…

- Committee should define 2-Pair medium power solution.
- Committee should define 4-Pair high power solution.

However, 2-Pair Medium power won't make it in the marketing world so how about….

802.3af Power over Ethernet
2-Pair Power over Ethernet Plus
4-Pair Power over Ethernet Turbo