Call For Interest
PoE- plus

Chris Di Minico
MC Communications
cdiminico@ieee.org

Powering Ethernet Devices Over Data Cabling

IEEE 802.3af

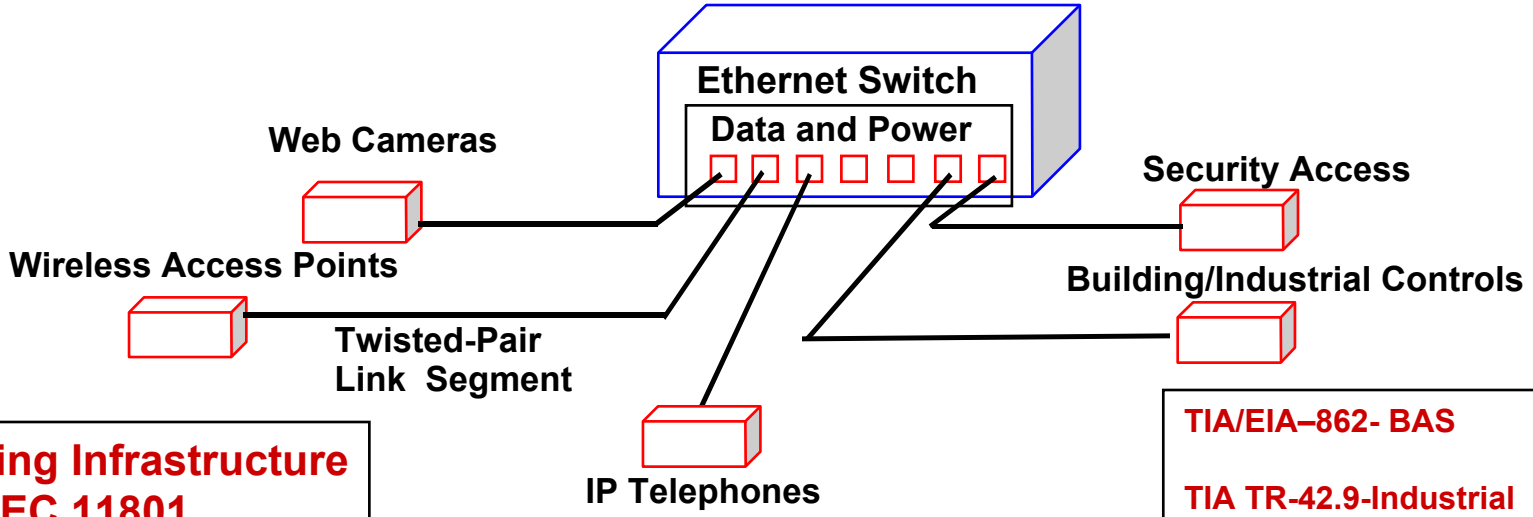

Cabling Infrastructure
ISO/IEC 11801
TIA/EIA-568

TIA/EIA–862- BAS

TIA TR-42.9-Industrial Telecommunications Infrastructure

ISO/IEC standard for industrial cabling - ISO/IEC 24702

Applications of Powering over Ethernet

IEEE 802.3af - Twisted-pair Link Segment with DTE power

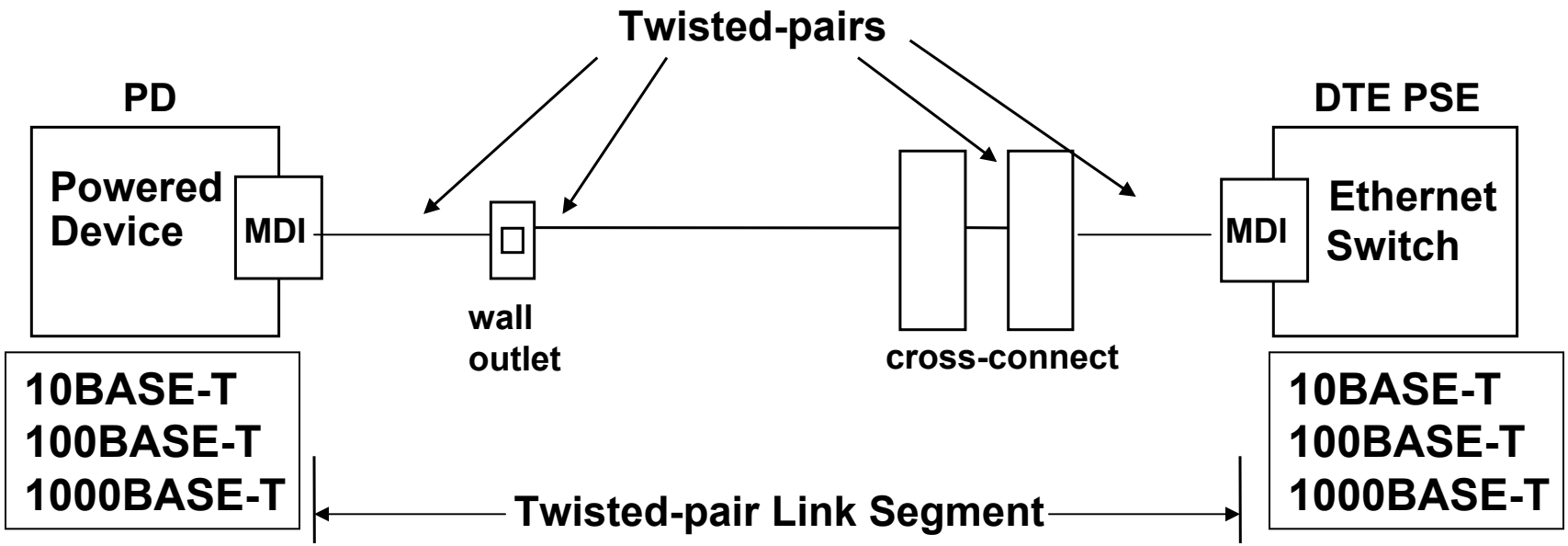

Powered Device
- **VOIP Phone**
- **Wireless Access Points**
- **etc…**

****Cabling channels as specified in ISO/IEC 11801** and **ANSI/TIA/EIA-568 exclude the equipment connectors and may include an optional consolidation point connector. The building cable is referred to as horizontal cable.**

Electrical

UTP Cables:

- **ANSI/TIA/EIA-568-B.2, The resistance of any conductor shall not exceed 9.38 ohms per 100 m (328 ft) at or corrected to a temperature of 20 °C.**

- **.4 % increase per degree C (DC correction-ASTM Test Method B 193-(.393%))**

DC loop=

Table 1

Temp degC	Conductor	DC Loop	%increase
20.00	9.38	18.76	
30.00	9.76	19.51	4
40.00	10.13	20.26	8
50.00	10.51	21.01	12
60.00	10.88	21.76	16
65.00	11.07	22.14	18

- **ANSI/TIA/EIA-568-B.2, 4.3.4.2 DC resistance unbalance: shall not exceed 5% (20 degree C) measured per ASTM D 4566**

- **ANSI/TIA/EIA-568-B.2, 4.3.4.4 Capacitance unbalance: pair-to-ground: The capacitance unbalance to ground of any horizontal cable pair at 1 kHz, at or corrected to a temperature of 20 deg C, shall not exceed 330 pF per 100 m**

Connectors

- ANSI/TIA/EIA-568-A, Section 10.4.4.4, DC Resistance: shall not exceed .3 ohm, measured per ASTM D 4566.

- ANSI/TIA/EIA-568-B.2. , 0.3 ohm for category 3 connecting hardware
- and 0.2 ohm for category 5e connecting hardware at 20 °C ± 3 °C

- Contact Resistance - initial - </= 2.5 milliohm - after reliability tests - change of </= 5 milliohm

- IEC 60603-7 - current capacity for connectors – per pin @20 degree c - 1.8 A (@0 - 2.2 A, @ 40 - 1.4 A, @60- .75 A)

- UL 1863 - 250 v

Safety

• SELV - CSA C22.2 No. 950/UL1950 (CEI/IEC 60950)
1.2.8.5 Safety Extra-Low Voltage (SELV) Circuit:
-60VDC

•Equipment classified as a Limited Power Source in accordance with IEC publication 60950.

Link Segment DCR

Link Segment (4 connectors):

•DC Resistance

Table 2

	90 meters	90 meters	4 connectors	100 meter channel
degC	conductor	loop	2x(4x.3 ohm per connector)	with 10m ScTP patch (2.8 ohm)
20.00	8.44	16.88	2.40	22.08
30.00	8.78	17.56	2.40	22.76
40.00	9.12	18.23	2.40	23.43
50.00	9.46	18.91	2.40	24.11
60.00	9.79	19.59	2.40	24.79
65.00	9.96	19.92	2.40	25.12

100 ohm ScTP patch cords and cross-connect:

•TIA/EIA/IS-729- DC resistance - For 26 AWG conductors, the resistance of the conductors shall not exceed 14 ohm per 100 meters (328 ft) at or corrected to a temperature of 20 C. (DC correction-ASTM Test Method B 193-(.393%))

Max DC Loop = ~25 ohm

ISO/IEC 11801:2002(E)-Generic cabling for customer premises

6.4.7 Direct current (d.c.) loop resistance

The d.c. loop resistance of each pair of a channel shall meet the requirements in Table 16.

When required, the d.c. loop resistance shall be measured according to IEC 61935-1.

Table 16 – Direct current (d.c.) loop resistance for channel

Maximum d.c. loop resistance Ω					
Class A	Class B	Class C	Class D	Class E	Class F
560	170	40	25	25	25

6.4.8 Direct current (d.c.) resistance unbalance

The d.c. resistance unbalance between the two conductors within each pair of a channel shall not exceed 3 % for all classes. This shall be achieved by design.

ISO/IEC 11801:2002(E)-Generic cabling for customer premises

6.4.9 Current carrying capacity
The minimum current carrying capacity for channels of Classes D, E and F shall be 0,175 A d.c. per conductor for all temperatures at which the cabling will be used. This shall be achieved by an appropriate design.

6.4.10 Operating voltage
The channels of classes D, E and F shall support an operating voltage of 72 V d.c. between any conductors for all temperatures at which the cabling is intended to be used.

6.4.11 Power capacity
The channels of classes D, E and F shall support the delivery of a power of 10 W per pair for all temperatures at which the cabling is intended to be used.

POWER TO THE LOAD

802.3af - DTE Power Delivery

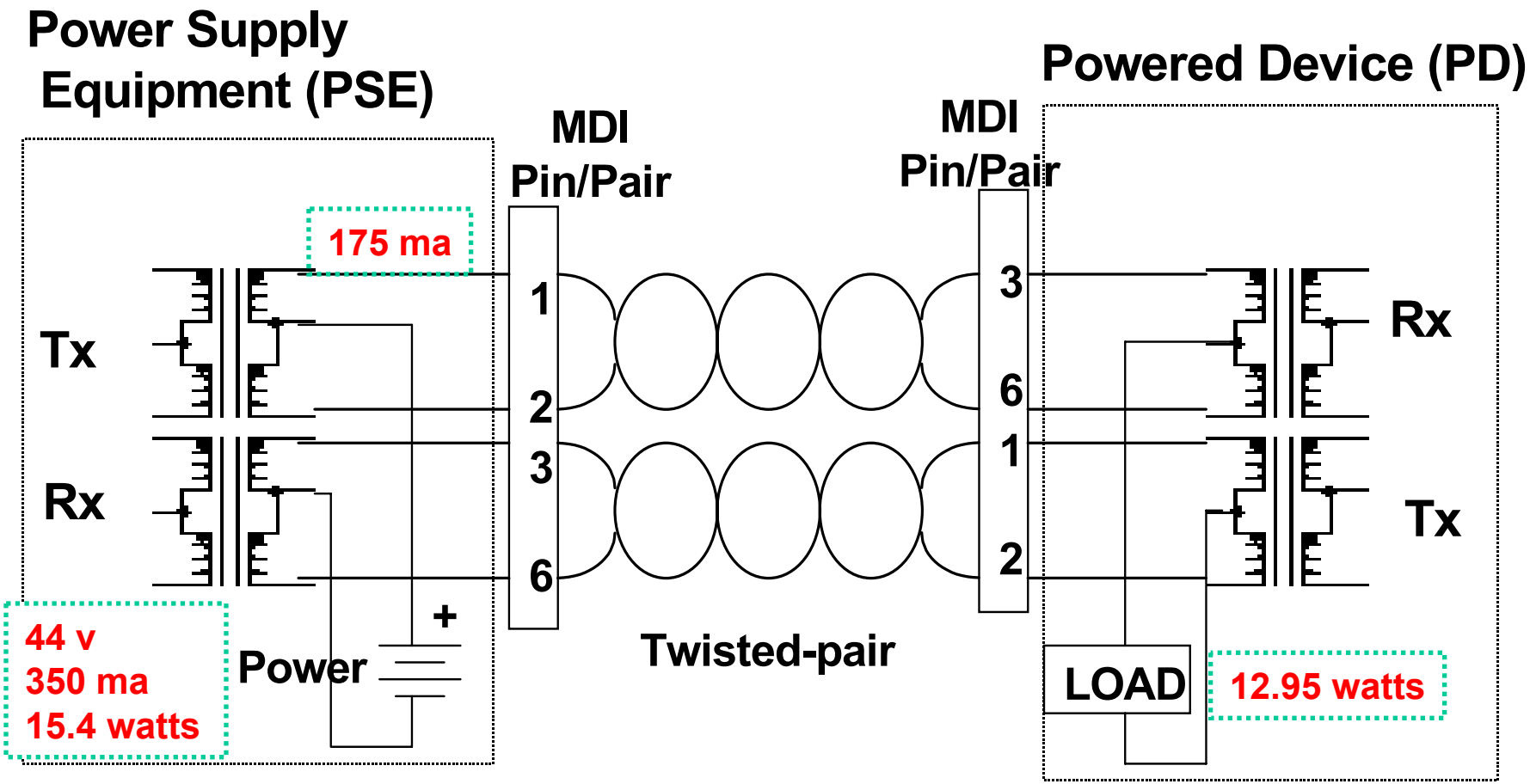

Figure 1

IEEE 802.3af-DTE Power Specification Reference

Figure 2

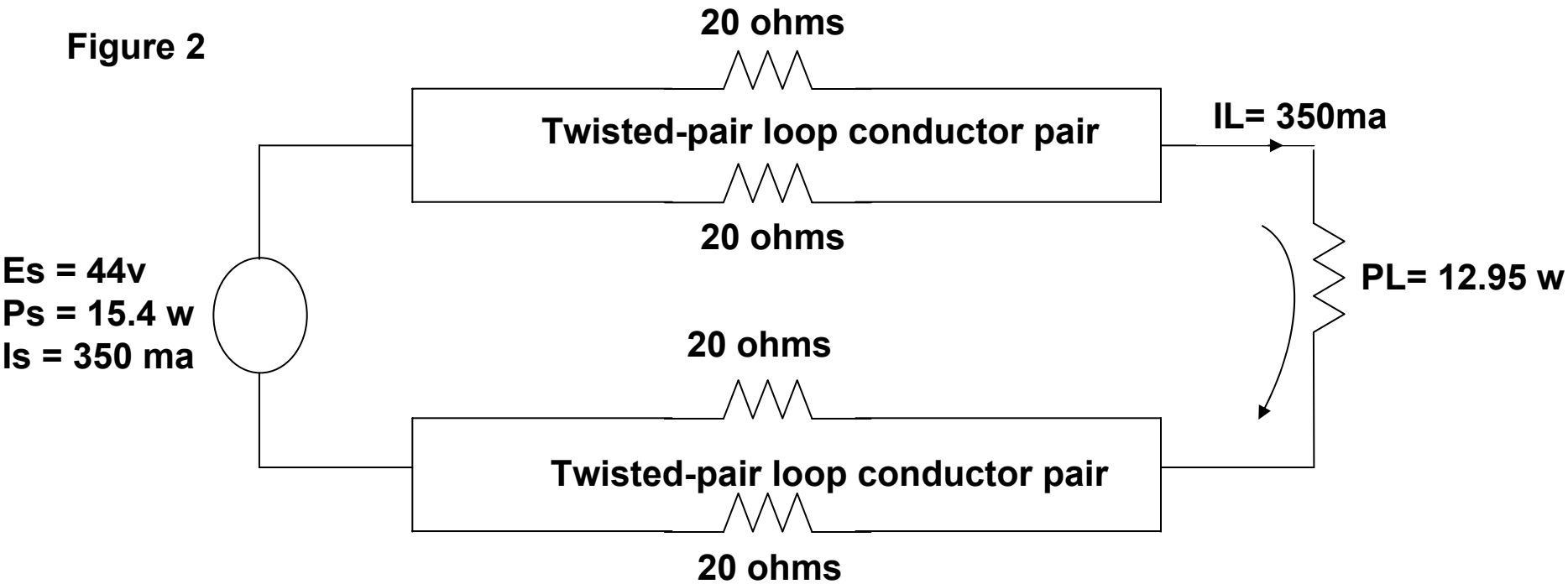

Max power at the output of the power supply: 15.4 watts =44V*.35A

<u>For a 20 ohm loop resistance (2 pair):</u>
Max Power dissipated in the cable: (0.35^2)*20= 2.45 w
Power at the powered device: =15.4-2.45=12.95 w

PART 68- Sec. 68.215 -

CONNECTION OF TERMINAL EQUIPMENT TO THE TELEPHONE NETWORK

Maximum Continuous Current Capacity of PVC Insulated Copper Wire,

Wire size, AWG	Circular mils	Maximum current, amperes
26	254.1	1.3
24	404.0	2.1
22	642.4	5.0

The table assumes a 45 deg. C temperature rise for wire sizes 22 AWG or larger, and a 40 deg. C rise for wire sizes smaller than 22 AWG, for poly-vinyl chloride insulating materials, and should be regarded as establishing maximum values to be derated accordingly in specific installations where ambient temperatures are in excess of 25 deg. C: **Note**: The total current in all conductors of multiple conductor cables may not exceed 20% of the sum of the individual ratings of all such conductors.

Interpretation of PART 68- Sec. 68.215 -

_____conductor @ 65 deg.:_____
^
I 40 deg. C Temperature rise assumed due to current
I
I_____conductor initially @ 25 deg. C:_____I=2.1A>>__

Following the guidance in the note:
Note: The total current in all conductors of multiple conductor cables may not exceed 20% of the sum of the individual ratings of all such conductors.

Sum of all conductors for 4 Pair cable=8 conductors x (2.1) = 16.8A
20% of the sum of the individual ratings = 16.8 A*.2=3.36 A

Rating for *"single conductor"* initially @ 25 deg. C= 3.36/8=.42A

PoE-Plus Power Specification Reference (example)

PL= 30 W
DCR Loop = 12.5 ohm

	Es	IL (A)	IL Conductor (A)
802.3af Minimum V	44	0.925	0.462
	45	0.883	0.442
	46	0.847	0.424
	47	0.815	0.407
	48	0.786	0.393
	49	0.759	0.380
	50	0.735	0.368
Minimum Voltage	**51**	**0.713**	**0.356**
	52	0.692	0.346
	53	0.673	0.336
Nominal Voltage	**54**	**0.655**	**0.327**
	55	0.638	0.319
	56	0.622	0.311
Maximum Voltage	**57**	**0.607**	**0.304**
	58	0.593	0.297
	59	0.580	0.290
	60	0.567	0.283

Reference: Circuit Model Figure 3

Table 3

PoE-Plus Power Specification Reference

Figure 3

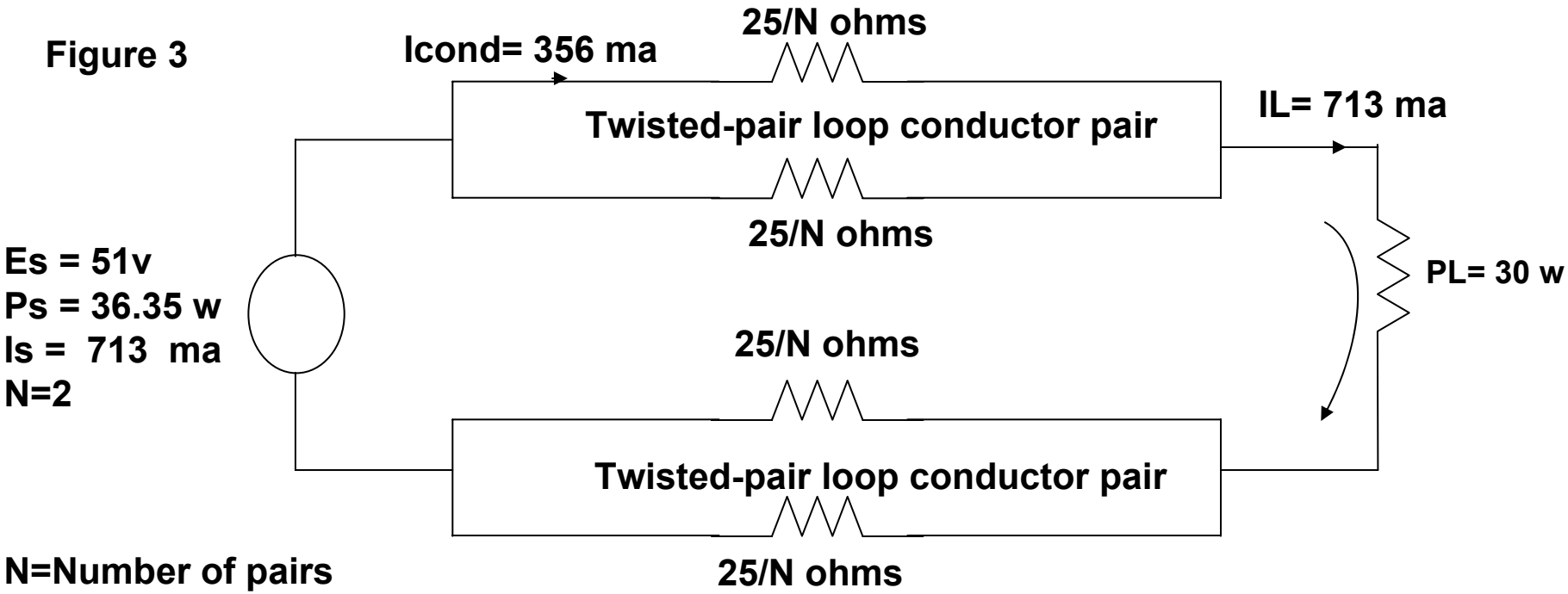

N=Number of pairs

	N =2	N = 4
	12.5 ohm Loop	6.25 ohm loop
PS	36.35	32.55
Pcable	6.35	2.55
PL	30 W	30 W
IL	0.713 A	0.638 A
Ilcond	0.356 A	0.160 A

Source: Sterling Vaden
Superior Modular Products

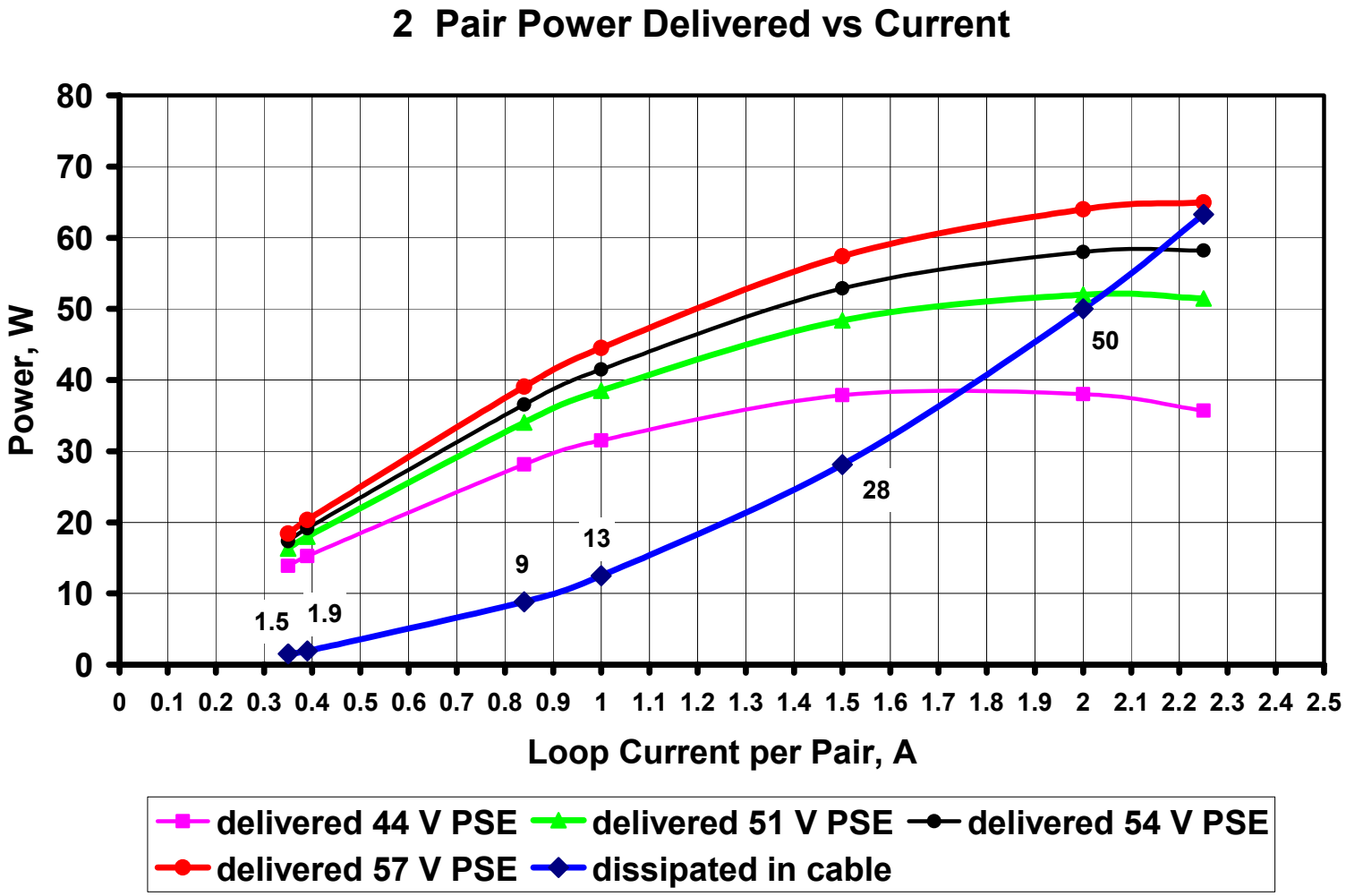

Assumptions: Loop resistance per pair 12.5 Ohms

Conclusions

- It's reasonable to consider increasing the 802.3af max power level at the input of the powered device to 30 w or more…. (a factor of two increase)

- Study group to investigate critical operational parameters
  - Numbers of pairs required
  - Transformer issues
  - Balance
  - Cable current capacity derating where ambient temperatures are in excess of 25 deg. C
  - Bundled and hybrid cables, shielded cables, cables in conduit
  - System Issues; deployment