IEEE802.3 4P Task Force

Channel Pair To Pair Resistance Imbalance

(End to End System Imbalance)

Ad Hoc

July 14, 2014

Meeting #12: Rev 016, Tuesday August 19, 2014

Yair Darshan
Microsemi
ydarshan@microsemi.com

Introduction

- The purpose of this ad-hoc is to recommend the Task-Force for what is needed to specify the channel pair to pair resistance unbalance while considering not only the formal channel components (Cable and Connector) but also the Power Interface (PI) components at both ends of the 4P PoE system.
- Patent Policy
  - Please read the Patent Policy slides at http://www.ieee802.org/3/patent.html prior the meeting.

- Meetings process. (Ad hoc agrees. August 12, 2014)
  - Time request for presentations: 1 Week prior the meeting
  - Sending PDFs to the reflector 3 days prior the meeting.
  - Discussions over the reflector prior the meeting is valuable and saves time during the meeting to reach consensus.
  - During the meeting: Questions only after presenter done with his presentation.
  - Follow the agenda as much as possible. Other issues can be tabled to be discuss later at the meeting, over the reflector, or at the next meeting agenda.
- Adhoc model was sent to reflector for commenting on updates. 5 people responds to accept. No other feedback received. Easy updates. Propose to accept if no comments by next meting. See slide 14.

Meeting # 12 Attendees.
Please send mail to confirm your attendance

Proposed Agenda for meeting #12

- Starting at 09:00. Ending at 10:00 AM. George Zimerman has volunteered to take notes of this meeting.
- 09:00 – 09:05: Introduction, Patent policy , approving meeting minutes from meeting #11 (sent on August Thursday 14, 2014 to the reflector)
- 09:05 – 09:15: Dave Dwelley: Reviewing Dave presentation with the objectives as stated at the minutes meeting to show his concerns in details.
- 09:15 – 09:35:Yair Darshan:
  - Addressing questions/opinions/concerns made by Dave Dwelley as reflected by minutes meeting including our email exchange and phone conference between Yair and Dave on Wednesday August 13, 2014.
  - Addressing Geoff Thompson proposal checking value proposing if moving to equation form.
- 09:35 to 09:40: Summarizing points of agreements and disagreements
- 09:40 – 09:45: Yair Darshan: Straw-poll to choose one of the proposals as the adhoc recommendations.
- 09:45: 10:00: To discuss the proposals for PSE PI made by:
- Slide 14 at http://www.ieee802.org/3/bt/public/jul14/bennett_01_0714.pdf

Future meeting proposed Agenda for meeting #13 (TBD) Last meeting prior to September 2014 IEEE meeting

- Finalizing Channel Base Line text for September 2014 meeting.
- Dave Dwelley: Discussing PD PI issues.
- Yair Darshan: System considerations for maximum pair current at E2E_C_P2P unbalance conditions.
  - Components cost effective criteria
  - Current limit protection needs – Review
  - Setting pair maximum current for Type 3 systems.
  - Deriving End to End Channel P2P_R/V_UNB and its related parameters

- Discussing proposals for PSE PI UNBALANCE PARAMETERS
- -Slide 15 at http://www.ieee802.org/3/bt/public/unbaladhoc/Generating%20the%20PSE%20and%20PD%20PI%20models%20and%20their%20unbalance%20requirements%20rev%20013b.pdf
- - Slide 14 at http://www.ieee802.org/3/bt/public/jul14/bennett_01_0714.pdf

Reviewing Dave Dwelley presentation to show his concerns and why Equation form has value

- Reviewing Dave presentation with the objectives to show the following (per the minutes meeting):
  - The value of using Equation as opposed to the current baseline text.
  - How the current base line text affect the transformer?
  - How a maximum power system (50-99W) with an active bridge in the PD, using a purely resistive PSE, at 100m where the imbalance in the cable and cordage would dominate so transformer bias currents could be > 1 milliamp.
  - Dave promised to detail this in a future presentation for next meeting #12 and showing that the difference between 5.5% and 7.5% would be mater.
- <u>Main presentation points:</u>

Closing TBDs in Base Line Text from May 2014 -1
Channel Unbalance parameters

- **Using traditional unbalanced parameters concept as used in IEEE802.3-2012 and TIA/EIA standards.**
  - Single value per parameter (single number per ad-hoc straw poll and baseline motion passed below)
  - Change to 7.5% per detailed analysis. The 0.1Ω part is done.
  - The proposed specification is implementation independent
  - There is single maximum value for the channel unbalance parameters
  - User don't care about cordage length, cable length, number of connectors etc.
  - Simple specification
  - **Complete analysis results shown at**: http://www.ieee802.org/3/bt/public/jul14/darshan_01_0714.pdf
- Equation form specification: Analysis shows no value.
- See details next slides

Yair: Responding to Questions/Opinions/Inputs From meeting #12

See attached contribution for meeting #12.

Comparison between proposed base line text and equation form and addressing FAQ.PDF

- Addressing opinions/concerns and FAQ.
- Modified Base Line text proposal

Closing TBDs in Base Line Text from May 2014
Channel Unbalance parameters

Proposal to update baseline text approved on IEEE802.3 May 2014 meeting to:

33.1.4.3 Pair Operation Channel Requirement for Pair to Pair Resistance Unbalance

4P pair operation requires the specification of resistance unbalance between each two pairs of the channel not greater than ~~200~~ 100 milliohms or 6%(TBD) 7.5% whichever is greater. Resistance unbalance between the channel pairs is a measure of the difference of resistance of the common mode pairs of conductors used for power delivery. Channel pair to pair resistance unbalance is defined by …..

The above is the proposal from previous meetings based on base line text approved on May 2014.

Notes:

1. 7% is possible choice per the conclusions slides.
2. 7.5% is the accurate worst case concept single number solution.
3. Statistical analysis will result with lower numbers however, this is reserved for later time after evaluating PSE and PD PI requirements.
4. See alternative specification solution in Annex Q and its pro's and con's

Straw poll

- For adhoc attendees.
- Please send your recommendations for channel specification per the options listed below:
- Option 1: Current base line text with 0.1 ohm or 7.5% which ever is greater.
- Option 2: Equation form: $C_P2PRUNB = \frac{R_{\max} - R_{\min} + 0.08\Omega}{R_{\max} + R_{\min} + 0.032\Omega}$

Ken Benet Proposal for PSE PI

Proposal for PSE PI

- <u>PSE PI</u>
- Vdiff_power (spec). Value TBD.
  - To base decision on this first
- Vdiff_diode OR diode model. Value TBD.
  - Opinion 1: Should be part of Vdiff power since it implies implementation therefore not required.
  - Opinion 2: Will be nice to have unless cause more delay or we decide that it is not required since it is embedded in Vdiff_power
  - Opinion 3: Since this diode is suggested in case we want that AC_disconnect will be supported in 4P system, we need fist to decided if we care about it or not. In addition Option 1 is covering it anyway by specifying Vdiff_power sufficient range.
- PSE_PI_P2PRUNB (after proposed transformation to fit E2E_C_P2PRUNB
- Consider: Additional parameter (TBD) Rmin.
- Solution will not prevent implementing low value of sense resistor or Mosfet RDSON.

Proposal for PD PI

- PD_PI_P2PRUNB (after proposed transformation to fit E2E_C_P2PRUNB)
- Consider: Additional parameter (TBD) Rmin.
- To be discussed if Vdiff or Idiff. Value TBD.

- Separate discussion: Do we need:
- Vdiff_diode OR diode model. Value TBD.

  - Opinion 1: If worst case number is defined for PD_PI_P2PRUNB and Vdif or Idiff, then Diode mode is not required. Moreover it implies implementations and make the spec implementation dependent.

  - Opinion 2: Will be nice to have unless cause more delay

Annex F – Model updates to be review by adhoc.

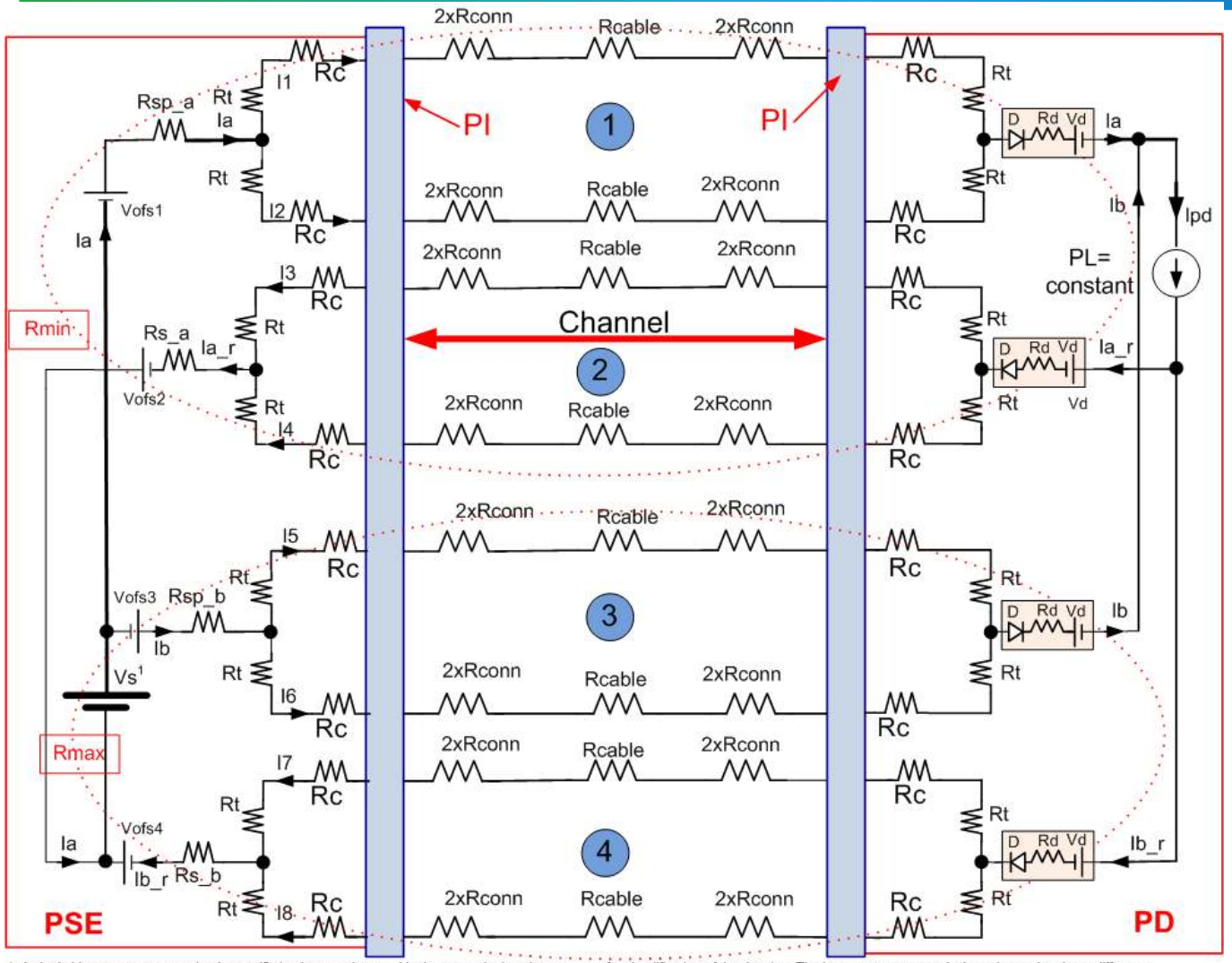

1. A single Vs was not meant to imply specific implementations and is drawn as single voltage source for simplification of the drawing. The important parameter is the pair to pair voltage difference.

- Notes for the general Model:

1. Total end to end channel connectors is 6 max.
2. The formal channel definition is marked in red arrow and is with up to 4 connectors.
3. Our work addresses also the internal application resistance of known components that are used
4. In simulations, pairs 1 and 2 components were set to minimum and pairs 3 and 4 were set to maximum values. See simulation results on previous meetings
5. Vofs1/2/3 and 4 was added. Per adhoc consensus for Vdif. To update the group. July 3, 2014.
6. "Real" Diode was added to the model for investigating behavior at low currents.

Partial List of open issues that are required to reach consensus (Source: SD, July 2014, IEEE adhoc meeting #10)

- End to end current unbalance
- Maximum PD power vs PD Type
- Imax at the lower pair resistance
- PSE PI UNBALANCE Parameters
- PD PI UNBALACE parameters
- PSE/PD Parameters Tables

Summary

- See meeting minutes #12 at the adhoc site:

http://www.ieee802.org/3/bt/public/unbaladhoc/index.html

- Reference Material and database

Where we are and where we are going -1

Ad-hoc response, MEETING #11, August 12, 2014 . Adhoc approve.

For PSE and PD PIs P2P UNB parameters.

-a single maximum number for each parameter (not curve).

-Parameters are: Voltage difference and resistance unbalance

-For improved spec, we may need to defined additional parameter: Rmin (TBD under research).

-Test setup TBD.

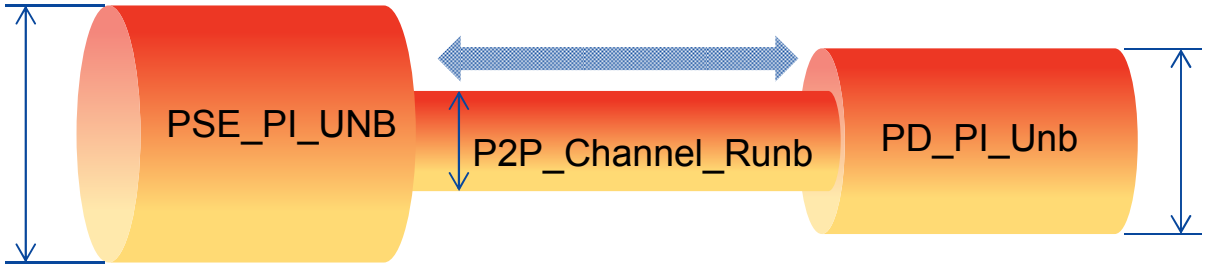

For Channel P2PRUNB:

-Variable Channel Length, number of connectors up to 4.

-Maximum C_P2PRunb 7.5% (TBD) or 0.1Ω which ever is greater. See details in http://www.ieee802.org/3/bt/public/jul14/darshan_01_0714.pdf

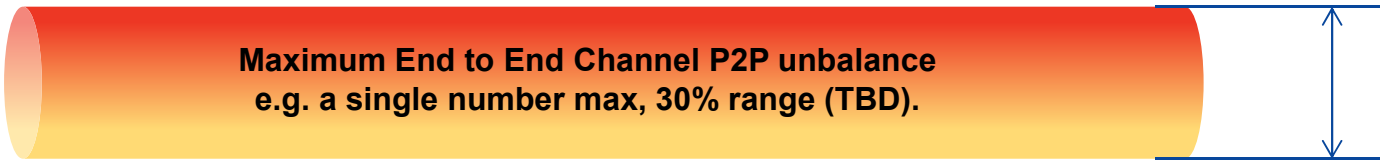

- Channel is capable of reducing the end to end unbalance as function of channel length.
  - PSE PI and PD PI unbalance specification are expected to allow higher unbalance than the channel.
    - PSE PI and PD PI needs larger unbalance range than channel P2PRUNB to allow different implementations

Where we are and where we are going -2

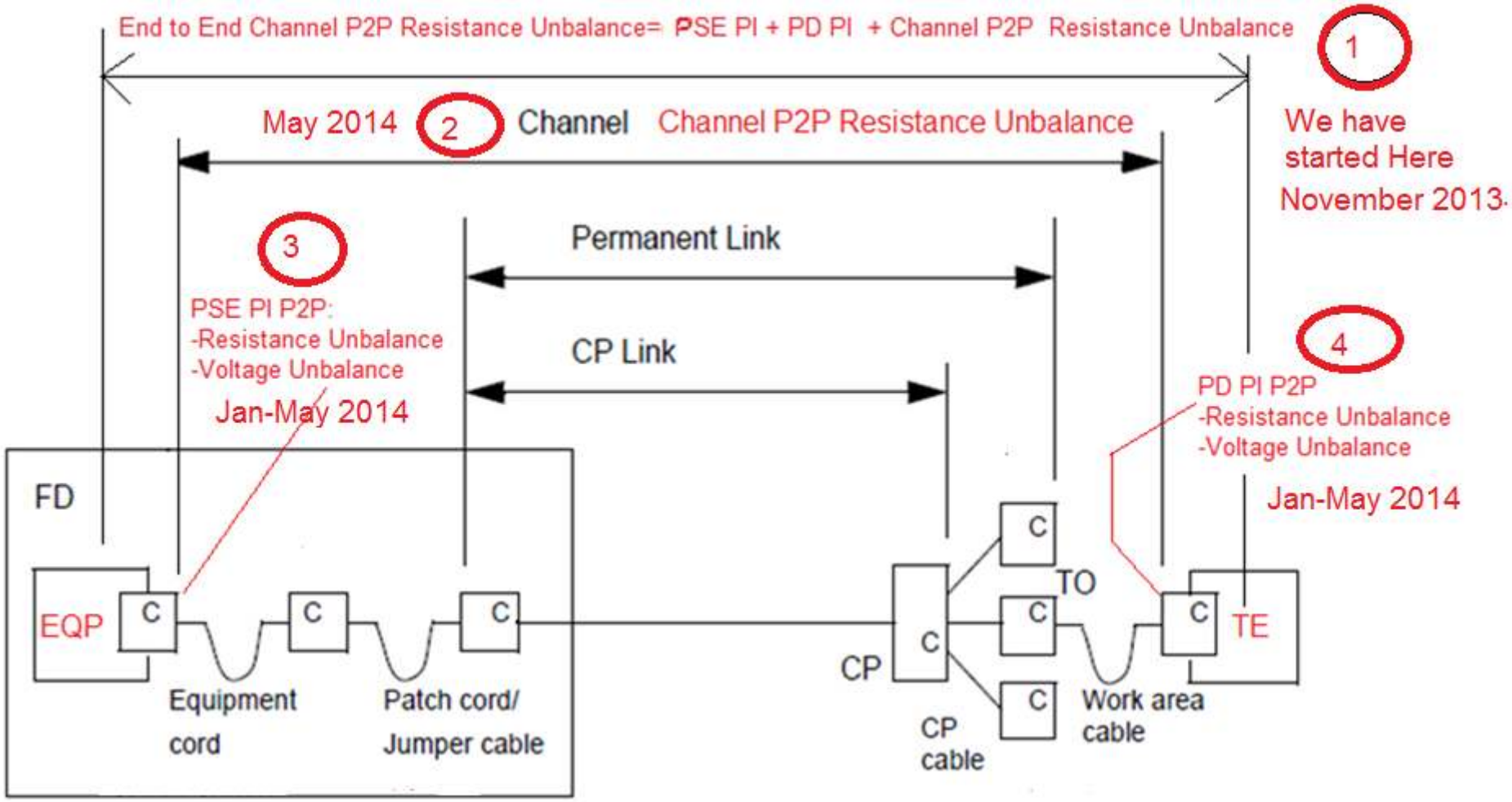

Figure 1. May 27, 2014

Ad-hoc response, July 16, 2014. No comments.

Source: Yair Darshan. Based on model used in IEEE802.3-2012.

Where we are and where we are going? -3

Adhoc response: OK , IEEE802.3bt adhoc SD July 2014

#	Parameter	Part of the spec.	Status
1	End to End Channel Pair to Pair Resistance Unbalance	No	-We have worst case numbers based on worst case data base. -Database is updated on the fly.
2	Channel Pair to Pair Resistance Unbalance. See figure 1	Yes. We hope also to reference cabling standard when its ready.	-Baseline text motion passed. numbers 0.2Ω, 6% max (TBD) -To change to 7.5% (TBD) and 0.1Ω.
3	PSE PI Pair to Pair Resistance Unbalance	Yes	-Consensus that P2P resistance unbalance need to be specified together with Voltage unbalance. -Models being discussed for testing, no complete work yet. -Numbers need to be derived from (1) and (2).
4	PD PI Pair to Pair Resistance Unbalance	Yes	

We agree that the above parameters will be calculated/defined at room temperature or close to it (see details next slide).

There is a consensus that the temperature will be 20°C. Ad-hoc to confirm on meeting #7

Ad-hoc response, June 10, 2014. Ad hoc agrees to set temperature of P2PUNB numbers at 20degC.

Annex A

33.1.4.2 Type 1 and Type 2 channel requirement

Type 1 and Type 2 operation requires that the resistance unbalance shall be 3 % or less. Resistance unbalance is a measure of the difference between the two conductors of a twisted pair in the 100 Ω balanced cabling system. Resistance unbalance is defined as in Equation (33–1):

$$\left\{ \frac{(R_{max} - R_{min})}{(R_{max} + R_{min})} \times 100 \right\}_{\%} \qquad (33\text{–}1)$$

where

R_{max}	is the resistance of the channel conductor with the highest resistance
R_{min}	is the resistance of the channel conductor with the lowest resistance

- The way channel pair (the differences between two wires in a pair) resistance unbalance was defined.

Source: Yair Darshan per IEEE802.3-2012

Annex A1

- Inputs from Pete Johnson:
- 3% DC Unbalance comes from ISO / IEC.
- **TIA 568** has DC Unbalance specified as 5% using **ASTM D 4566** definition of DC Unbalance that is <u>different</u> from that used by ISO.
- The ASTM method is % Runb = 100 * (Max R – Min R) / Min R
-
- Yair Response (to be discussed by the group) next (3rd meeting):
  - Since cables vendor wants to meet "all standards" they meets the 2% cable. System and component vendors count on the 3% channel.
  - Our IEEE POE standard is counting on the 3% max.
  - The ASTM method that calculates % Runb = 100*(Max R – Min R) / Min R is familiar but has no practical physical meaning related to current unbalance that we can use e.g. for transformers. The equation that we are using is a derivation of the current unbalance definition and rationale.
  - As a result, I believe we should stay with current 3% pair resistance unbalance and our IEEE equation for Unbalance.
- Pete agrees to this response.
- Group agreed to Yair proposed response as well.

Annex A2 - ANSI/TIA-568-C.2

- Resistance unbalance of a channel

6.2.1 DC loop resistance

DC loop resistance for category 3, 5e, 6, and 6A channels shall not exceed 25 Ω. Refer to TIA TSB-184 for additional information on channel resistance related to guidance on delivering power.

6.2.2 DC resistance unbalance

DC resistance shall be measured for all channel conductors. DC resistance unbalance shall be calculated for each pair of the channel in accordance with equation (14) and shall not exceed the greater of 3% or 200 milliohms. DC resistance unbalance is not specified for category 3 channels.

$$Resistance_Unbalance_{pair} = \left(\frac{|R_1 - R_2|}{R_1 + R_2} \right) \cdot 100\% \qquad (14)$$

where:

R_1 is the DC resistance of conductor 1.

R_2 is the DC resistance of conductor 2.

Source: Yair Darshan per ANSI/TIA-568-C.2

Annex A3 - ANSI/TIA-568-C.2

- Connecting Hardware requirements

6.8.1 DC resistance

DC resistance shall be measured in accordance with ASTM D4566 at 20 ℃ ± 3 ℃ for all connecting hardware cable pairs.

> NOTE – DC resistance is a separate measurement from contact resistance as specified in Annex A. Whereas DC resistance is measured to determine the connector's ability of transmit direct current and low frequency signals, contact resistance is measured to determine the reliability and stability of individual electrical connections.

Category 3 connecting hardware DC resistance between the input and the output connections of the connecting hardware (not including the cable stub, if any) used to terminate 100 Ω twisted-pair cabling shall not exceed 0.3 Ω.

Category 5e, 6, and 6A connecting hardware DC resistance between the input and the output connections of the connecting hardware (not including the cable stub, if any) used to terminate 100 Ω twisted-pair cabling shall not exceed 0.2 Ω.

6.8.2 DC resistance unbalance

DC resistance unbalance shall be calculated as the maximum difference in DC resistance between any two conductors of a connector pair measured in accordance with IEC 60512, Test 2a.

Category 3 connecting hardware DC resistance unbalance should not exceed 50 mΩ. Category 5e, 6 and 6A connecting hardware DC resistance unbalance shall not exceed 50 mΩ.

Source: Yair Darshan per ANSI/TIA-568-C.2

Annex A4 – Channel P2P Resistance Unbalance

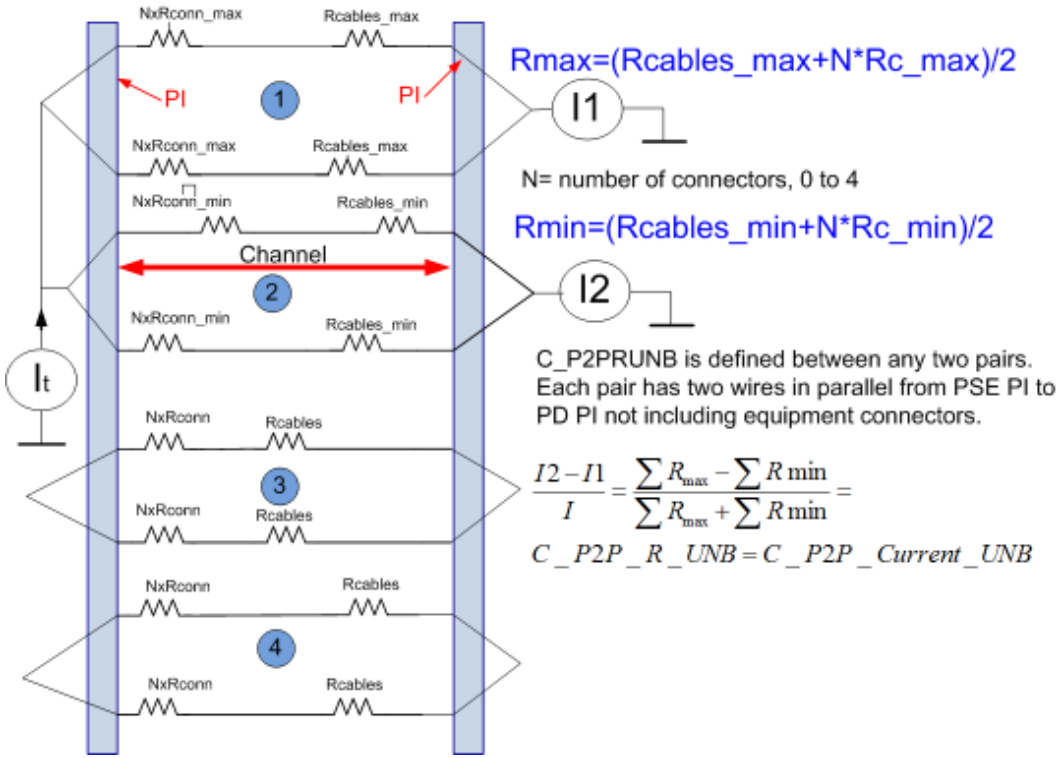

$$\frac{I2-I1}{I}=\frac{\sum R_{\max}-\sum R\min}{\sum R_{\max}+\sum R\min}=$$

$$C_P2P_R_UNB=C_P2P_Current_UNB$$

$$Channel_P2P_Current_DIFFERENCE=$$

$$=I2-I1=I\cdot\frac{\sum R_{\max}}{\sum R_{\max}+\sum R_{\min}}-I\cdot\frac{\sum R_{\min}}{\sum R_{\max}+\sum R_{\min}}=I\cdot\frac{\sum R_{\max}-\sum R_{\min}}{\sum R_{\max}+\sum R_{\min}}$$

As a result, Channel P2P Resistance or Current Unbalance ratio is::

$$\frac{I2-I1}{I}=\frac{\sum R_{\max}-\sum R\min}{\sum R_{\max}+\sum R\min}=C_P2P_R_UNB=C_P2P_Current_UNB$$

Annex A3 - ANSI/TIA-568-C.2

- Worst case channel configuration for developing the return loss limit.
- To be added later

Annex B: What is more important P2PRUNB or Current increase/pair due to at worst case conditions?

- To discuss the advantages that PD constant Power Sink allows us. Source: Yair Darshan
- Background material for considering (P2PRUNB in this slide refer to the end to end channel P2PRUNB):
  - Worst case End to End Channel Pair to Pair Channel Resistance Unbalance is at short cable (<100m).
  - At short cables PD voltage is higher that at 100m channel length and pair/port current is lower
  - Not only that the port current is lower, it is <600mA for Type 3 systems below TBD channel length.
    - **As a result, P2PCRUNB max may not an issue (pending the P2PCRUNB value).**
  - At 100m the P2PCRUNB is much smaller than at short channel
  - Resulting with less significant contribution to Ibias due to P2PCRUNB and as a result to OCL.
  - **This approach was validated in:** http://grouper.ieee.org/groups/802/3/4PPOE/public/jul13/darshan_2_0713.pdf and requires further investigation for completing this work.

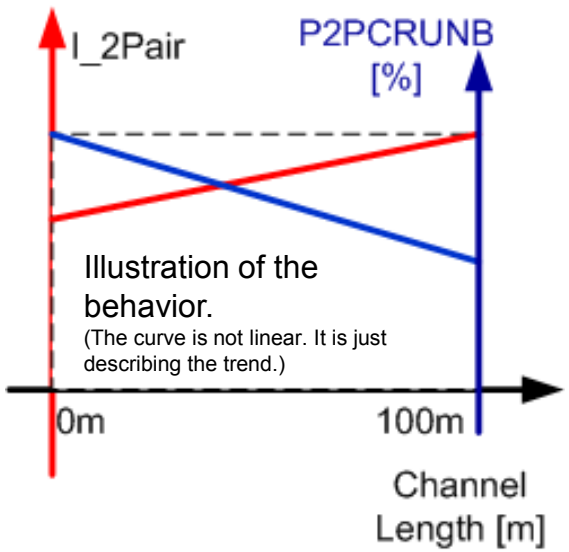

The answer is: In order to answer the question we need to check both data sets 1 and 2 in the worst case data base. We need to check the following equation:

$$0.5\cdot(1+\alpha_{(L=100m)})\cdot I_{total_100m} < or > 0.5\cdot(1+\alpha_{(L=0.15m)})\cdot I_{total_0.15m}$$

$$\alpha_{(L=100m)} = End2End_C_P2PRUN_at_100m$$

$$\alpha_{(L=0.15m)} = End2End_C_P2PRUN_at_0.15m$$

Source:
1. See link above, from July 2013.
2. Adhoc meeting #2, February 24, 2014.

Annex C1: Why we care for P2P resistance unbalance parameters

Source: Yair Darshan
August 8, 2014: Reviewed by Brian Buckmeier and Victor Renteria
August 11, 2014:

- In 4P system:
- If P2PRUNB>0 the PD current over each 2P will not be the same.
  - 51W PD with maximum total current of 1.2A, and End to End Channel P2PRUNB=30% will cause the current to split to 0.6A+0.18A=0.78A over the 2pairs with minimum resistance and 0.42A with the pair with maximum resistance.
- In general: The pair with the highest current will be: It*(1+P2PRUNB)/2
  - This may require to overdesign the magnetics for high P2PRUNB values (The above example is still considered cost effective).
  - Watching limits of connector pins, PCB traces and power components on the DC current path at PSE and PD and overdesign accordingly.
  - So there is interest to have components with lower P2PRUNB along the channel as possible by cost and manufacturability limitations to result with lower End to End Pair to Pair RUNB.

Annex C2: Why we care for P2P resistance unbalance parameters

- Other concerns was how it will affect on PD minimum available power for a 60W system (two times the 802.3at power). The decision was that for our current data base we can supply 49W for the PD (instead of 51W). See 802.3bt objective.
  - This was done by calculating what will be the power at the PD if we keep maximum 600mA at the pair in order not to cause issues to Type 2 component/ devices that can work with 4P
- Other concern was if P2PRUNB will increase power loss on the cable. We show that it will not. Moreover we show that if P2PRUNB increased, the power loss is decreased.

$$Trise = 0.5 \cdot N \cdot It^2 \cdot R_{loop_\max} \theta_N \cdot [1 - P2PCRUNB]$$

See: http://www.ieee802.org/3/4PPOE/public/nov13/darshan_02_1113.pdf for more details.

Source: Yair Darshan

Annex D (was K) :Same-Pair Current Unbalance vs. DC bias on Transformers

- Source: Dinh, Thuyen, Pulse.

- Current unbalance on cable pair: $\Delta I = I_1 - I_2$
- This ΔI is the net current difference between the 2 half windings of the cable side of the transformer, it only flows in one of the 2 half windings
- Since transformers are tested with bias current injected through both windings, as specified in clause 25 (sub-clause 9.1.7 of ANSI X3:263:199X), a DC bias of ($\Delta I/2$) injected into both windings will produce the same DC flux as that produced by ΔI flowing through one half winding.
- Transformers are, therefore, tested with ($\Delta I/2$) DC bias current to simulate current unbalance of ΔI.

Annex D1: Calculations of CP2PRUNB with constant power sink model and the effect on transformer bias current.

Equation	Symbol	Units	Channel Length	
			1m	100m
End to End Pair to Pair Channel Resistance Unbalance: $CP2PRUNB = \frac{\sum R\max - \sum R\min}{\sum R\max + \sum R\min}$	CP2PRUB	-	0.26	0.112
	I	A	1.02	1.2
	I/2	A	0.51	0.6
I*CP2PRUNB	DI	A	0.2652	0.1344
I*CP2PRUNB/2	DI/2	A	0.1326	0.0672
I*(1+CP2PRUNB)/2	Imax=(I+di)/2	A	0.643	0.667
I*(1-CP2PRUNB)/2	Imin=(I-di)/2	A	0.377	0.533
Ibias=3%*Imax/2		A	0.0193	0.02
Sanity Check	I	A	1.02	1.2
Effect on Ibias of transformer: 3%*(Imax-0.6)/2	d(Ibias)	mA	0.639	1.008

Source: Yair Darshan
August 8, 2014: Reviled by Brian Buckmeier and Victor Renteria / BEL
August 11, 2014: Reviled by Dinh, Thuyen / Pulse

Annex D2: Affecting parameters on Transformer Ibias

- PSE Rsense and Rdson are out of the loop for pair unbalance
  - They affect only on P2P unbalance
    - Which affect Iport (increase or decrease) which affect Ibias by 3%*(Iport_max-Iport_nominal)
- How to reduce Ibias?
  - Adding Rballast on transformers reduces Ibias directly
  - Defining minimum cable length reduces P2PRUNB_max. The effect on Ibias is 3%*(Iport_max-Iport_nominal).
  - Adding in PD ballast resistors (cost effective in PD and not in PSE)
    - May not be needed for PD power below TBD.
  - Using matched diode bridges, significantly reduces P2PRUNB and as a result, the current unbalance

Source: Yair Darshan

Annex E1 – Connector and Cabling standard data

- Summary of resistivity and resistance unbalance (Source Wayne Larsen)
- specifications in TIA cabling standards
- Resistivity of cable and “cordage” from cabling standards
- – Cable DC resistance is 9.38 Ohms / 100 meters, ANSI/TIA-568-C.2, 6.4.1, page 58. Cat 5e, 6, and 6A are all the same.
- – Cordage DC resistance is 14 Ohms / 100 meters, ‘568-C.2, 6.6.1,page 74. Cat 5e, 6, and 6A are all the same.
- – Cable and cordage resistance unbalance with a pair is 2.5 % per IEC 61156-1, ‘568-C.2-1 6.4.2 page 58. All categories are the same.
- – Cable and cordage resistance unbalance between pairs is not specified, but has been studied and found to be less than 5 %.
- – Connectors are allowed 200 milliohms resistance and 50 milliohms resistance unbalance between any conductor. They actually have much less resistance.
- Yair Darshan notes:
- These values are maximum values, pre PoE standard.
- There are no specifications for minimum values as needed for P2P unbalance analysis. As a result, to cover both angles of P2PRUNB at short and long channel, maximum 12.5Ω channel was used for generating maximum pair current and channel with horizontal cable resistivity of 0.066 Ω/m was used to generate worst case P2PRUNB. Later this number was updated to 0.079 Ω/m to include twist rate effect.
- As for connectors: less than 0.06 Ω connector resistance was used. See worst case data base for details.

Annex E2 – Connectors terms.

- **Source Yakov Belopolsky / BEL**
- The term used in the connector industry is LLCR (Low Level Contact Resistance)- Bulk R_{LLCR-B}
- Low Level Contact Resistance (LLCR-Bulk) consists of four components
- Plug Conductor Resistance R_{CR}
- Plug Blade/Conductor Contact Resistance R_{PBCR}
- Plug Blade/Jack Wire Contact Resistance or TRUE LLCR R_{CRTRUE}
- Jack Wire Resistance R_{JWR}
- $R_{LLCR-B} = R_{CR} + R_{PBCR} + R_{CRTRUE} + R_{JWR}$
- However, it is easy to measure and subtract $(R_{CR} + R_{PBCR})$ from the Bulk so many connector vendors use the Contact resistance $(R_{CRTRUE} + R_{JWR})$
- **A typical differential between two types measurements is less than 20 milliohm**
- The reason is that the $(R_{CRTRUE} + R_{JWR})$ is affected by environmental exposure and defines the quality of the connector design separately from the plug blade termination quality

Annex E3: Connector data from vendors datasheet

Source: Yair Darshan

	Vendor	Resistance per datasheet
CAT6	A	30 milliohm max ,Jack only[1]
CAT6	B	35 milliohm max ,Jack only[1]
CAT6	C	30 milliohm max ,Jack only[1]

1. It is per datasheet so actual values are lower.

Source: Yair Darshan

Annex E4 - Connector data – Source BEL

http://www.ieee802.org/3/at/public/2006/07/belopolsky_1_0706.pdf slide 22.

30milliohm connector resistance shown by BEL

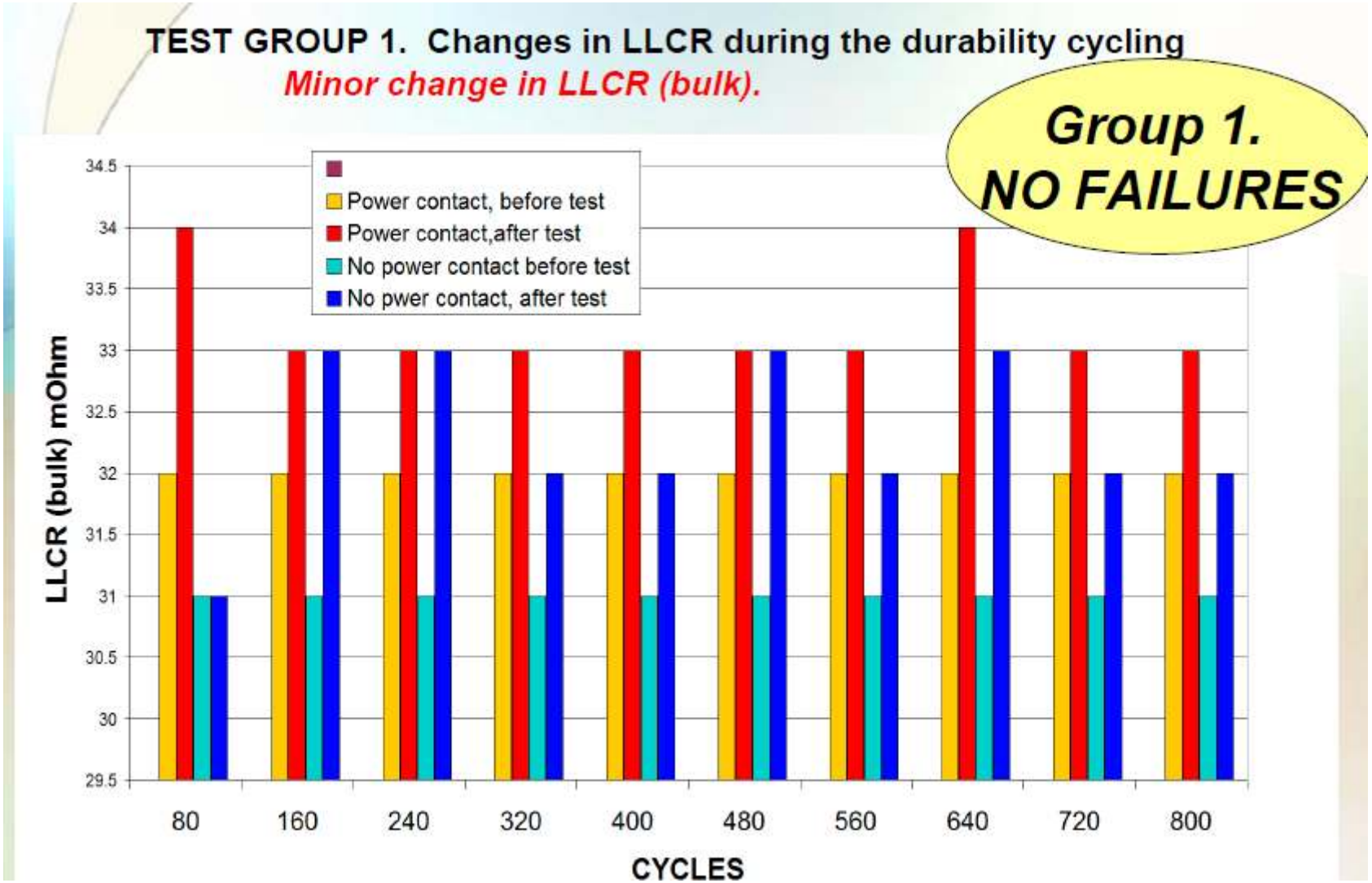

Annex E5: Connectors test data

- Source: Microsemi
- Each number in the table is the average resistance of all pins from end to end (Plug and Jack) for each connector.

Connector #	Vendor A	Vendor B	Vendor C	Vendor D	
	CAT6	CAT6	CAT6A	CAT6A	
1	45	43	39	42	45
2	43	43	40	49	46
3	48	42	40	40	39
4	48	46	42	39	44
5	43	45	39	38	47
6	46	39	43	50	44
7	45	42	39	38	43
8	49	46	42	41	44
9	46	45	39	44	45
10	42	45		51	44
11	43	46		44	43
12	43	43		50	39
13		46		54	40
14		42		39	47
15		46		55	42
16		46		51	48

Average connector resistance	43.50
Max	55
Min	38
Rdiff	17

	Vendor A	Vendor B	Vendor C	Vendor D
Average	45.08	44.06	40.33	44.53
Max	49	46	43	55
min	42	39	39	38
Rdiff	7	7	4	17

- **All connector resistance: 55**milliΩ max.
  - **Vendors approve 60milliΩ** max.
  - There are high quality connector that get to **30**milliΩ.
  - The average resistance of these samples: **43.5milliΩ**
- **Additional Information (not shown from the tables attached):**
- Within a connector, **pair to pair resistance difference**≤20milliΩ was confirmed.
- Most results were below 15milliΩ, therefore this number chosen to be at the worst case data base table.
- Simulations will be done for 15 and 20 milliohms as well.

Source: Yair Darshan

Annex E6: Connectors test data

http://www.vtiinstruments.com/Catalog/Technotes/RJ-45_Excels_For_Stria_Gage_Connection.pdf

- See above link page 12.
- 45milliohm connector resistance of 40 connector samples.
- See page 13 at the above link for connector resistance over temperature

Source: Yair Darshan.
Based on the above link.

Annex F – End to End P2P Resistance Unbalance Model

General Channel Model and its components that we have used.

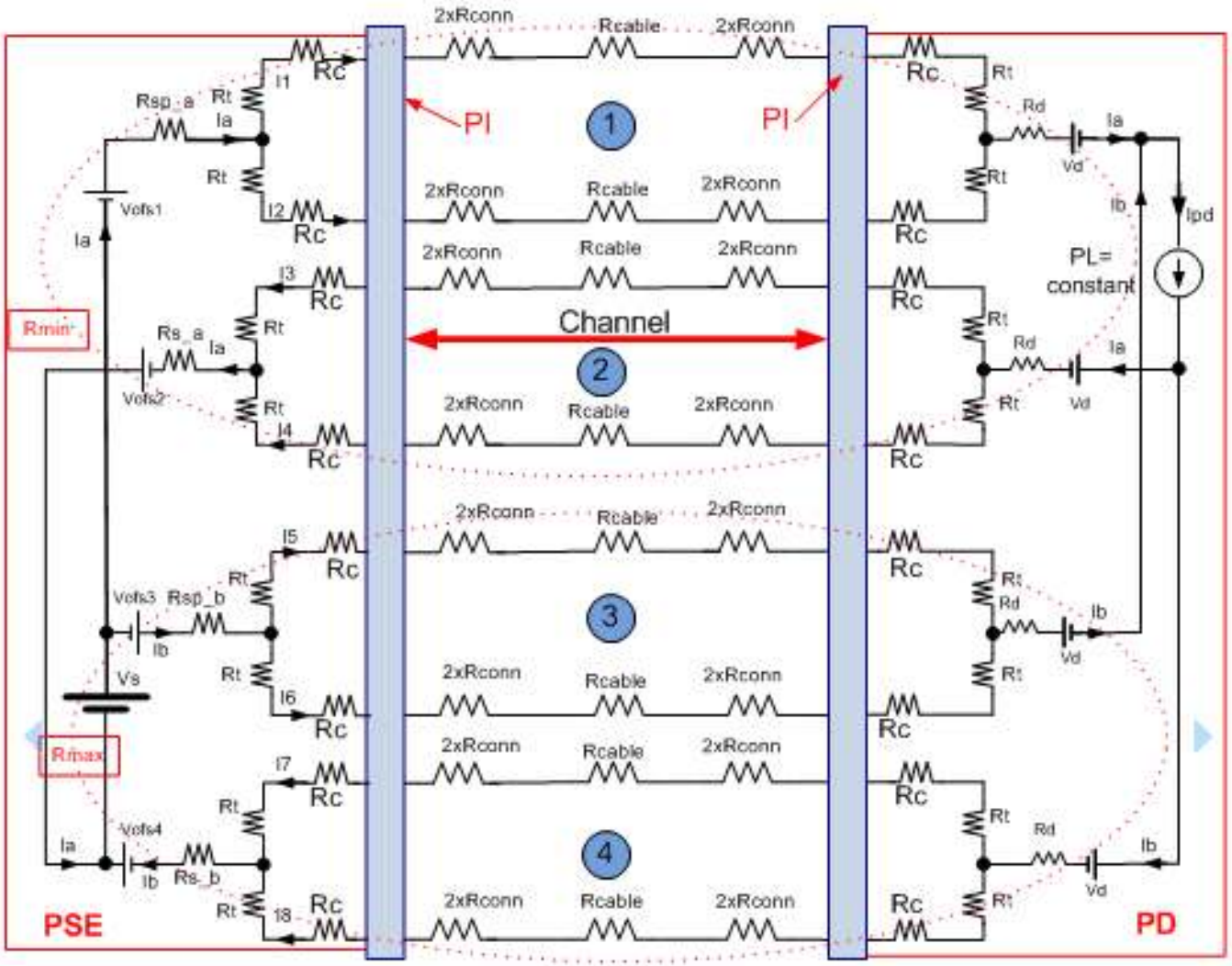

Notes for the general Model:

1. Total end to end channel connectors is 6 max.
2. The formal channel definition is marked in red arrow and is with up to 4 connectors.
3. Our work addresses also the internal application resistance of known components that are used
4. In simulations, pairs 1 and 2 components were set to minimum and pairs 3 and 4 were set to maximum values. See simulation results on previous meetings
5. Vofs1/2/3 and 4 was added. To update the group. July 3, 2014.

Source: Yair Darshan and Christian Beia

Annex G1:Worst Case Data Base (updates) -1

See notes to the table in next slide

#	Parameter	Data set 1	Data set 2
1	Cordage resistivity[1]	0.14Ω/m	
		0.09262Ω/m for AWG#24 for worst case analysis	
2	Horizontal cable resistivity option 1[2]	11.7Ω/100m=(12.5Ω - 4*0.2Ω) / 100m which is the maximum resistance resulting with maximum Iport.	7.92Ω/100m (CAT6A, AWG23) This is to give us maximum P2PRunb
3	option 2[3]	0.098Ω/m.	
4	Unbalance parameters	• Cable Pair resistance unbalance: 2%. Channel pair resistance unbalance: 3% • Cable P2P Resistance Unbalance: 5%. Channel P2P Resistance Unbalance: 0.2Ω/6% max TBD.	
5	Channel use cases to check. See figure 1 for what is a channel.	A. 6 inch (0.15 m) of cordage, no connectors. B. 4 m channel with 1 m of cordage, 3 m of cable, 2 connectors C. 23 m channel with 8 m of cordage, 15 m of cable, 4 connectors D. 100m channel with 10 m of cordage, 90 m of cable, 4 connectors	
6	End to End Channel[6]	The Channel per figure 1 + the PSE and PD PIs.	
7	Transformer winding resistance	120mOhm min, 130mOhm max	
8	Connector resistance[8]	40mOhm min, 60mOhm max	30mOhm min, 50mOhm max
9	Diode bridge[9]	Discreet Diodes: 0.39V+0.25Ω*Id min; 0.53V+0.25Ω*id max. (TBD)	
10	PSE output resistance [10]	0.25+0.1 Ohm min, 0.25+0.2 Ohm max	0.1+0.05 Ohm min, 0.1+0.1 Ohm max

Ad-hoc response, June 24, 2014. Adhoc accept this table

Source: Yair Darshan, Christian Beia, Wayne Larsen

Annex G2: Worst case data base- Notes. -2

1	Per standard. It is maximum value for solid and stranded wire. The maximum value is close to AWG#26 wire resistance/meter including twist rate effects. **See annex E1.** Due to the fact that patch cords may use AWG#24 cables with stranded (for mechanical flexibility) or solid wire (for improved performance), we will use the AWG#24A for worst case analysis as well. Cordage with AWG#24 wire has 0.0842Ω/m for solid wire and with 10% twist rate it will be 0.09262 Ω/m.
2	We need both data sets (data set 1 and data set 2) to find where is the worst condition for maximum current unbalance. **See Annex B curve and data** showing that at short channel we get maximum P2PRUNB but it may has less concern to us since the current is lower. We need to do all use cases calculation to see where is the maximum current over the pair; at short channel or long channel. The CAT6A cable with AWG#23 has 0.066 Ω/m. Including 12% increase on cable length due to twist rate, the effective cable resistance per meter will be 1.12*6.6 Ω/100m= 0.0792 Ω/m.
3	Standard definition per Annex E1. We will check how results will be differ when AWG#23 is used for worst case results (lower resistance than standard definition for horizontal cable which is a maximum value.
4	
5	
6	PSE PI and PD PI includes: connector, transformer, resistors. PD PI includes diode bridge.
7	
8	Connector resistance was changed since the difference (60-30) milliohm is not representing Rdiff, it is representing maximum and minimum results of connector resistance of different connectors. To correct it, we change the numbers according to inputs from connector vendors and measured data. See Annex E1-E6 for confirmation.
9	Vf and Rd are worst case numbers of discrete diode which there is no control on Vf and Rd. It needs more investigation to verify that we are not over specify. (Christian is checking it). Normally match components (e.g. matched two diode bridges) are used for 4P operation. Any how ,PD PI spec. will eventually set the requirement.
10	PSE output resistance e.g. Rs_a/b=Rsense+Rdson in addition to winding resistance. See model I Annex F for reference.

Adhoc response, June 24, 2014. Adhoc accept this table

Source: Yair Darshan and Christian Beia

Annex G3: Deciding on Channel components data

Connector data combinations that don't make sense.				
#	Rmax milliΩ	Rdif milliΩ	Rmin milliΩ	Notes
1	201	-	-	200milliΩ max, standard
2	-	51	-	50milliΩ max, standard
3	60	50	10	Meets the standard however doesn't make sense to have 71.4% P2PRUNB.
4	61	-	-	Field results, 60milliΩ max
5	-	30	-	Field results, 20milliΩ max
Connector data combinations that make sense.				
6	60	20	40	OK
7	50	20	30	OK for worst case.

- Connector vendors: connector resistance rage of different connectors for worst case lowest numbers: 0.03Ω to 0.06 Ω. (Standard is 200milliohm max and Rdiff=50milliohm max which is not helping us).
- With in a connector (pin to pin or pair to pair), the difference between Rmax and Rmin (=Rdiff) is 0.02Ωmax, Typically it is not more than 0.015Ω. (instead 0.03Ω).
- As a result, for worst case calculation we will use for connectors:
  - Connector Rmax=0.05Ω, Connector Rdiff=0.02Ω max.
- Cordage: 0.14 Ω/m per standard. Cable: 0.0792Ω/m for CAT6A AWG#23 cable for worst case analysis.

Adhoc response, June 24, 2014. Adhoc accept this table

Source: Yair Darshan

Annex G4: Minimum resistance existing in PSE and PD Pis, Example based on Annex G1 database.

- Calculating existing minimum resistance in PSE and PD PI.

All numbers calculated for a pair = two wires in parallel.

	PSE PI minimum resistance range		
	Max	Min	
Connectors	0.015	0.015	0.03 ohm per connector divided by 2
Diodes	0.25	0	If AC disconnect then higher e.g. 0.25 ohm
Transformers	0.06	0	For 1000BT and up, otherwise 0. transformer winding from center tap to outer leg=0.12ohm/2
EMI Filters	0.1	0.1	
PCB traces	0.01	0.01	
Total	0.435	0.125	

	PD PI minimum resistance range		
	Max	Min	
Connectors	0.015	0.015	0.03 ohm per connector divided by 2
Diodes	0.25	0.05	If active diodes are used (Mosfets) the resistance is lower (*)
Transformers	0.06	0	For 1000BT and up, otherwise 0. transformer winding from center tap to outer leg=0.12ohm/2
EMI Filters	0.1	0.1	
PCB traces	0.01	0.01	
Total	0.435	0.175	

Total minimimum PSE and PD resistance per pair 0.125 + 0.175 = 0.3

Source: Yair Darshan

Annex G5: Examples for Spice simulations for model shown in Annex F per data shown in Annex G1 with slight diode unbalance

	L=1m		L=100m	
	I (mA)	P2PRUNB	I (mA)	P2PRUNB
Ia+ (I(R41))	743.32	40.03%	649.94	11.12%
Ib+ (I(R42))	318.33	REF	519.88	REF
Ia- (I(R20))	671.34	35.67%	633.87	9.88%
Ib- (I(R19))	390.3	10.16%	535.95	1.52%
Ia total	1061.65		1169.82	
Ib total	1061.65		1169.82	
Idiff_pos_max	425		130	
Idiff_neg_max	281		65	

PARAMETERS:

0.05 for Pait to Pair Run
0.02 for Pair Runb

P2PRunb = 0.05
Pair_Runb = 0.02
Ppd = 51
ILIM = 2
Lcable = 100
Resistivity = {0.1*Cordage_Resistivity+0.9*Cable_Resistivity}
Cordage_Resistivity = 0.0926
Cable_Resistivity = 0.0792
Rcable_max = {Lcable*Resistivity}

alfa = {(1-Pair_Runb)/(1+Pair_Runb)}
beta = {(1-P2PRunb)/(1+P2PRunb)}
beta_special = 0.925

Rt_max = 0.13 Rt_min = 0.12

Rsense_max = 0.25 Rsense_min = {Rsense_max*0.98}

Rdson_max = 0.1 Rdson_min = 0.05

Rconn_max = 0.05 Rconn_min = 0.03

Vd_max = 0.1 Vd_min = 0

Rd_max = 0.1 Rd_min = 0.0001

-Simulation results were validated with other simulation tools and was sync with lab results. (May 2013, July 2013, August 2014).
-Components value taken from Data base Annex G1 with some changes on diode data (tighter unbalance)

Source: Yair Darshan

See earlier work at:
http://www.ieee802.org/3/4PPOE/public/jul13/beia_1_0713.pdf
http://www.ieee802.org/3/4PPOE/public/jul13/darshan_2_0713.pdf
http://www.ieee802.org/3/4PPOE/public/nov13/beia_01_1113.pdf
http://www.ieee802.org/3/4PPOE/public/nov13/darshan_02_1113.pdf
http://www.ieee802.org/3/4PPOE/public/nov13/darshan_03_1113.pdf

Real diodes in simulations. Vd and Rd is used to generate unbalance.

Annex G6: Examples for Spice simulations for model shown in Annex F per data shown in Annex G1 with PD identical diodes/ Ideal Diode Bridge(*)

	L=1m		L=100m	
	I (mA)	P2PRUNB	I (mA)	P2PRUNB
Ia+ (I(R41))	562.2 / 564.6	6.4% / 10.6%	630 / 602	7.73% / 8.12%
Ib+ (I(R42))	499.6 / 456.2	0.5% / REF	540 / 512	REF
Ia- (I(R20))	567.2 / 557.7	6.8%/10%	617 / 588	6.61% / 6.94%
Ib- (I(R19))	494.7 / 463	REF / 0.75%	554 / 526	1.28% / 1.37%
Ia total	1061.82 / 1020.8		1170 /1114	
Ib total	1061.82 / 1020.8		1170/1114	
Idiff_pos_max	62.6		90.4 / 90	
Idiff_neg_max	72.45		62.3 / 62	

PARAMETERS:

P2PRunb = 0.05 — 0.05 for Pait to Pair Run
Pair_Runb = 0.02 — 0.02 for Pair Runb
Ppd = 51
ILIM = 2
Lcable = 100
Resistivity = {0.1*Cordage_Resistivity+0.9*Cable_Resistivity}
Cordage_Resistivity = 0.0926
Cable_Resistivity = 0.0792
Rcable_max = {Lcable*Resistivity}

alfa = {(1-Pair_Runb)/(1+Pair_Runb)}
beta = {(1-P2PRunb)/(1+P2PRunb)}
beta_special = 0.925

Rt_max = 0.13 — Rt_min = 0.12
Rsense_max = 0.25 — Rsense_min = {Rsense_max*0.98}
Rdson_max = 0.1 — Rdson_min = 0.05
Rconn_max = 0.05 — Rconn_min = 0.03
Vd_max = 0.01 — Vd_min = 0.01
Rd_max = 0.1 — Rd_min = 0.1

-Simulation results were validated with other simulation tools and was sync with lab results. (August 2014).
-Components value taken from Data base Annex G1 with some changes on diode data (tighter unbalance)

Source: Yair Darshan

See earlier work at:
http://www.ieee802.org/3/4PPOE/public/jul13/beia_1_0713.pdf
http://www.ieee802.org/3/4PPOE/public/jul13/darshan_2_0713.pdf
http://www.ieee802.org/3/4PPOE/public/nov13/beia_01_1113.pdf
http://www.ieee802.org/3/4PPOE/public/nov13/darshan_02_1113.pdf
http://www.ieee802.org/3/4PPOE/public/nov13/darshan_03_1113.pdf

(*) For ideal diode bridge: Diode model was shorted by 0.01 ohm. Vd_max/min=0.01V, Rd_max/min=0.1

Annex J1-Acronyms used in the ad-hoc activity

- **(1) Pair resistance unbalance :** Is the resistance unbalance between two wires in the same pair as specified by IEEE802.3 and other standards. This is 2% for cable and 3% maximum for the channel. Channel is a 4 connector model (cables and connector only).

- **(2) Pair to Pair resistance unbalance**: is the resistance unbalance between two wires of the same pair connected in parallel to another two wires of other pair connected in parallel. It is 5% for a cable.

(The resistance of the two wires of the pair is know also as the common mode resistance of the pair)

- **(3) End to End channel pair to pair resistance unbalance** it is the 26.2% (TBD) worst case calculation on a worst case data base that we have generated. The 26.2% (TBD) was calculated at 20degC. The channel is including components at PSE PI and PD PI that affects the whole end to end channel.

- **(4) PSE PI Pair to Pair resistance unbalance** is the P2P DC Common Mode PSE Output Resistance Unbalance measured at the PSE PI and include PI interface circuitry such RDSON, Current sense resistor, equipment connector, magnetic winding resistance. This is included in the " end to end channel resistance unbalance" and need to be extracted from it to be separate definition for PSE PI P2PRUNB.

- (4.1) PSI PI Pair to Pair voltage difference is the P2P DC Common Mode PSE Output Voltage Difference measured at the PSE PI under TBD conditions.

Source: Yair Darshan

Annex J2-Acronyms used in the ad-hoc activity

- **(5) PD PI Pair to Pair resistance unbalance** is the P2P DC Common Mode PD input Resistance Unbalance measured at the PD PI and include PI interface circuitry such Diode bridge voltage offset and dynamic resistance, equipment connector, magnetic winding resistance. This is included in the "end to end channel resistance unbalance" and need to be extracted from it to be separate definition for PD PI P2PRUNB.
- **(5.1) PD PI Pair to Pair voltage difference** is the P2P DC Common Mode PD input Voltage Difference measured at the PD PI under TBD conditions.
- **(6) Channel Pair to Pair resistance unbalance** is the P2P resistance unbalance of the cables and 4 connector model. This need to be excreted from the " end to end channel resistance unbalance" and specified separately.
- So (PSE PI +Channel + PD PI)p2prunb all together is 26.2% (TBD).
- Items 4,5 and 6 will be specified in the standard, (item 2 is covered by item 6).
- Meeting #4: Adhoc response: ok. Meeting #5: To discuss changes in RED. Done.

Source: Yair Darshan

Annex L1: What are the options for complete specification for unbalance PSE PI and PD PI models parameters

Source: Yair Darshan. June 25, 2014

- Current unbalance is a function of Voltage unbalance and resistance unbalance between pairs.
  - These are the only parameters that affect the current unbalance and as a result the maximum pair current due to the unbalance situation.
- For simplicity let's assume Voltage unbalance is zero. We will address the effect of Voltage difference later.
- By definition, the current unbalance between any two pairs is:

$$Idiff = |I_1 - I_2| = It \cdot \frac{\sum R_{\max}}{\sum R_{\max} + \sum R_{\min}} - It \cdot \frac{\sum R_{\min}}{\sum R_{\max} + \sum R_{\min}} = It \cdot \left(\frac{\sum R_{\max} - \sum R_{\min}}{\sum R_{\max} + \sum R_{\min}} \right)$$

$$\frac{Idiff}{It} = \left(\frac{\sum R_{\max} - \sum R_{\min}}{\sum R_{\max} + \sum R_{\min}} \right) = Runb = Iunb$$

Drawing

- Since we are discussing P2P unbalance the Runb and Iunb is between Pair to Pair and the sum of R1 and the sum of R2 represents two wires in parallel including all components connected to each wire.
- The above equations are the same for PSE PI, Channel and PD PI unbalance. The difference is the content of R1 and R2 e.g. for channel it is just cables and connectors. For PSE and PD PIs it contains additional other components such MOSFETs, Diodes, Transformers etc.

Annex L2: What are the options for complete specification for unbalance PSE PI and PD PI models parameters

- The maximum pair current is function of the total End to End Channel Resistance and Voltage Unbalance.
- The PSE PI and PD PI are affecting Imax at short and long channels.
- By definition for maximum pair current Imax as function of P2PRUNB and P2P Voltage Difference of the system from end to end:

$$\mathrm{Im}\,ax = \frac{It}{2} + \frac{It \cdot E2E_P2PRUNB}{2} = \frac{It \cdot (1 + E2E_P2PRUNB)}{2}$$

$$\mathrm{Im}\,ax = \frac{It \cdot (1 + E2E_P2PRUNB)}{2} = \frac{It \cdot \left[1 + \left(\frac{\left(\sum R_{\max}^{PSE} - \sum R_{\min}^{PSE}\right) + \left(\sum R_{\max}^{PD} - \sum R_{\min}^{PD}\right) + \left(\sum R_{\max}^{CH} - \sum R_{\min}^{CH}\right)}{\sum R_{\max}^{PSE} + \sum R_{\max}^{PD} + \sum R_{\max}^{CH} + \sum R_{\min}^{PSE} + \sum R_{\min}^{PD} + \sum R_{\min}^{CH}}\right)\right]}{2}$$

$$\mathrm{Im}\,ax = \frac{It \cdot (1 + E2E_P2PRUNB)}{2} = \frac{It \cdot \left[1 + \left(\frac{\sum R_{diff}^{PSE} + \sum R_{diff}^{PD} + \sum R_{diff}^{CH}}{\sum R_{\max}^{PSE} + \sum R_{\max}^{PD} + \sum R_{\max}^{CH} + \sum R_{\min}^{PSE} + \sum R_{\min}^{PD} + \sum R_{\min}^{CH}}\right)\right]}{2}$$

- **The PSE PI P2PRUNB can be defined in similar way by similarity.**
- Note: PSE PI P2PRUNB is not equal to E2E_CPWPRUNB nor to PD PI P2PRUN. It requires additional mathematical procedure to find this parameters so it will be equal to the E2E_CP2PRUNB target.

Source: Yair Darshan

Annex L3: What are the options for complete specification for unbalance PSE PI and PD PI models parameters

- We can see that Imax is function of Rmax and Rmin and Rdiff=Rmax-Rmin

$$\mathrm{Im}ax = \frac{It \cdot (1 + E2E_P2PRUNB)}{2} = \frac{It \cdot \left[1 + \left(\frac{\sum R_{diff}^{PSE} + \sum R_{diff}^{PD} + \sum R_{diff}^{CH}}{\sum R_{\max}^{PSE} + \sum R_{\max}^{PD} + \sum R_{\max}^{CH} + \sum R_{\min}^{PSE} + \sum R_{\min}^{PD} + \sum R_{\min}^{CH}} \right) \right]}{2}$$

- From the above, PSE PI P2PRUNB upper limit can be extracted and it will have the same effect on Imax with the same exact concept.

$$PSE_PI_P2PRUNB = \frac{\sum R_{diff}^{PSE}}{\sum R_{\max}^{PSE} + \sum R_{\max}^{PD} + \sum R_{\max}^{CH} + \sum R_{\min}^{PSE} + \sum R_{\min}^{PD} + \sum R_{\min}^{CH}}$$

$$PSE_PI_P2PRUNB = \frac{(k + \alpha) \cdot \sum R_{diff}^{PSE}}{\sum R_{\max}^{PSE} + \sum R_{\min}^{PSE} + \beta} = \frac{\sum R_{diff_new}^{PSE}}{\sum R_{\max_new}^{PSE} + \sum R_{\min_new}^{PSE}}$$

- The terms k, a and b are used to transform the true PSE PI P2PRUNB to PSE PI P2PRUNB as stand alone function.
- Now we can see what are the necessary unbalanced properties that are needed to uniquely specify the PSE PI?

Source: Yair Darshan

Annex L4: What are the options for complete specification for unbalance PSE PI and PD PI models parameters

$$PSE_PI_P2PRUNB = \frac{\sum R_{diff}^{PSE}_new}{\sum R_{\max_new}^{PSE} + \sum R_{\min}^{PSE}_new} = \frac{\sum R_{\max_new}^{PSE} - \sum R_{\min}^{PSE}_new}{\sum R_{\max_new}^{PSE} + \sum R_{\min}^{PSE}_new}$$

$$\mathrm{Im}ax = 0.5 \cdot It \cdot \left(1 + \frac{\sum R_{diff}^{PSE}_new}{\sum R_{\max_new}^{PSE} + \sum R_{\min}^{PSE}_new} \right)$$

- Conclusions: In order to limit Imax_pair you must have in addition to voltage difference and maximum load current It, two additional parameters.
- Firs and fast observation: Imax is equation with 3 parameters. Total current, It is given. We need two variable to solve equation with two parameters
- So specifying only Rdiff and Vdiff for PSE PI or PD PI will not work. It leads to interoperability issues. (one parameter is loose..)

Source: Yair Darshan

Annex L5: What are the options for complete specification for unbalance PSE PI and PD PI models parameters

- Imax is direct function of PSE PI RUNB and Channel and PD parts.
- The transformed PSE_PI_P2PRUNB_new control Imax.

$$\mathrm{Im}ax = 0.5 \cdot It \cdot (1 + PSE_PI_P2PRUNB_new) = 0.5 \cdot It \cdot \left(1 + \frac{\sum R_{diff_new}^{PSE}}{\sum R_{\max_new}^{PSE} + \sum R_{\min_new}^{PSE}} \right)$$

- If we specify PSE PI by only Rdiff and Vdiff we will have the following interoperability issues:

- Examples:
- Rdiff=Rmax-Rmin=0.2=X:
  - P2PRUNB=(0.2-0)/(0.2+0)=100%
  - P2PRUNB=(0.23-0.03)/(0.23+0.03)=77%
  - P2PRUNB=(0.3-0.1)/(0.3+0.1)=50%
  - P2PRUNB=(1-0.8)/(1+0.8)=11%

Interoperability Issue:
Different UNBALANCE
For the same Rdiff resulting
With different Imax for the
Same channel and PD

Source: Yair Darshan

Annex L6: What are the options for complete specification for unbalance PSE PI and PD PI models parameters

Source: Yair Darshan

Option	PSE PI P2PRUNB	Rmax	Rmin	Rdiff	Notes
1	Yes	-	-	-	1. Ratio. Fully implementation independent . 2. Need two parameter to solve equation with two variables. Need more research to verify completeness.
2	-	Yes	Yes	-	1. Complete solution. 2. Not flexible, Implementation dependent.
3	Yes	Yes			1. Complete solution. 2. Not flexible, Implementation dependent. Problem to limit Rmax
4	Yes	No	Yes	-	1. Complete solution. 2. Rmin is exists any way. 3. Not fully Implementation in dependent but tolerable.
5	Yes	NO	NO	YES	1. Complete solution. 2. Implementation dependent.
6	NO	NO	NO	YES	1. Not complete 2. Implementation dependent 3. Interoperability issues

Annex L7: Why Channel Rdiff=Delta R is not sufficient to define channel unbalance.

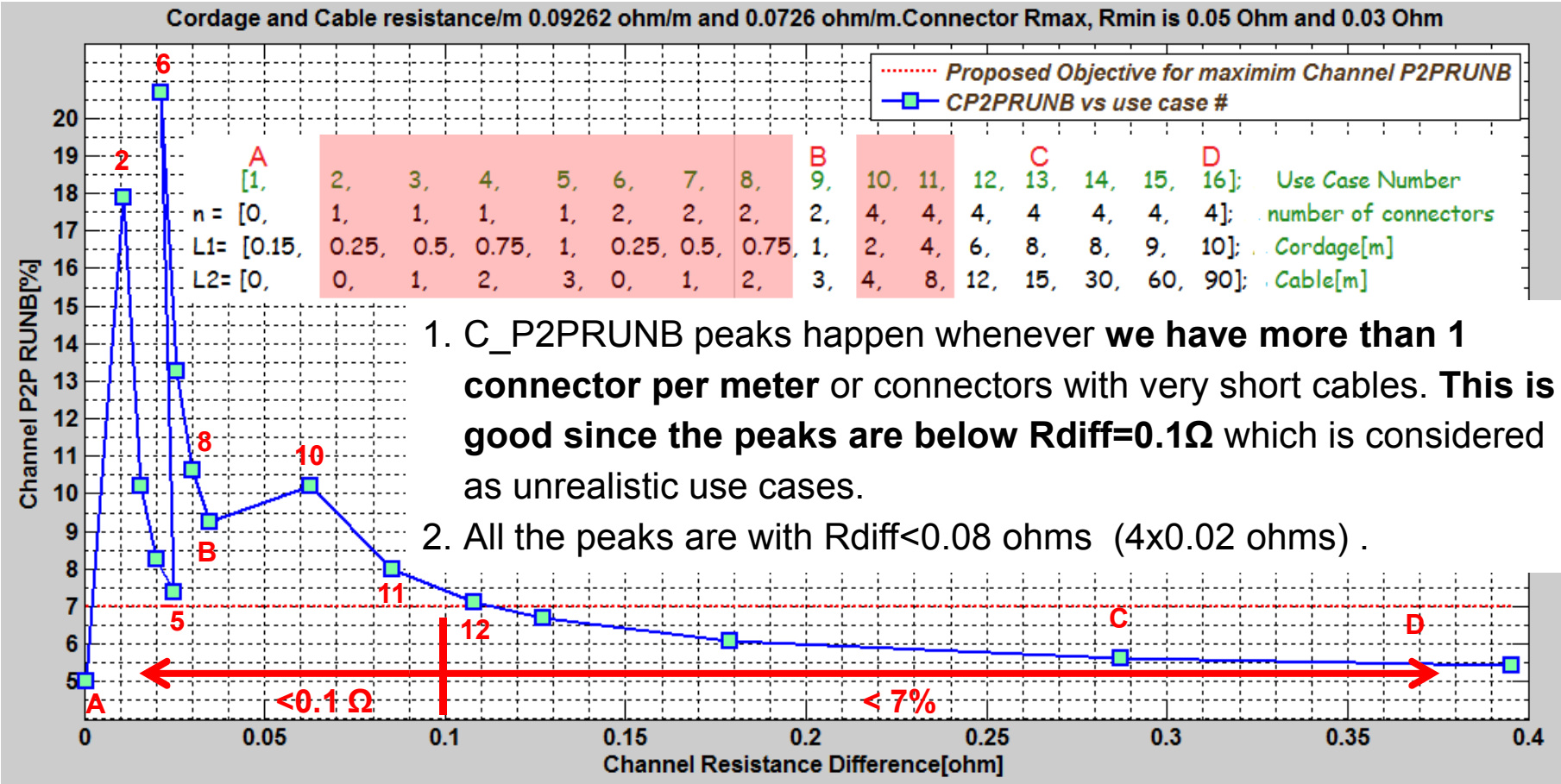

1. C_P2PRUNB peaks happen whenever **we have more than 1 connector per meter** or connectors with very short cables. **This is good since the peaks are below Rdiff=0.1Ω** which is considered as unrealistic use cases.
2. All the peaks are with Rdiff<0.08 ohms (4x0.02 ohms) .

- The mathematical basics are the same as explained for PSE and PD PIs. See Annex L1-L6 for details. In the channel it is further more obvious per next slide.

Source: Yair Darshan . See complete presentation at:
http://www.ieee802.org/3/bt/public/jul14/darshan_01_0714.pdf

Annex L8: Why Channel Rdiff=Delta R is not sufficient to define channel unbalance.

- If we will specify Channel P2P RUNB by its Rmax-Rmin=Rdiff=0.1Ω (or any number) property only we will end with the following undesired results:
- (a) At long channel (high resistance) the unbalance is converging to lowest possible value. It is bounded by the P2PRUNB[%] property which is much lower than the connectors unbalance property.
- (b) At short channel when resistance is low, the P2PRUNB property is bounded by the connectors Rmax, Rmin which results with 25% unbalance for Rmax=0.05Ω, Rmin=0.03Ω ➔ Rdiff=0.02 Ω ➔ (50-30)/(50+30)=25%
- So it is obvious that best and optimized performance will be achieved with two properties needed for the channel: P2PRUNB and Rdiff.

Source: Yair Darshan

Annex M: How we address P2PRUNB vs Temperature

- Adhoc has recommended the following approach (meetings 5,6,7)
  - How to handle PSE PI, PD PI Pair to Pair unbalance parameters and Channel P2RUNB as function of temperature?
    - <u>Adhoc response:</u>
    - Use PSE PI, PD PI pair to pair Unbalance parameters and Channel P2PRUNB that was calculated at 20°.
    - Set it as the number to meet without saying at what temperature it is.
    - Vendors will have to assure that they meet it at their operating temperature range spec.
    - How they will do it, we don't care. The rest is per 33.7.7.

Ad-hoc response, June 10, 2014. Ad hoc agrees to set temperature of P2PUNB numbers at 20degC.

Annex P: The value of channel maximum Rdiff

- On May 2014 we vote for the following base line text highlighting the TBD areas.
  33.1.4.3 Channel Requirement for Pair to Pair Resistance unbalance
  4P pair operation requires the specification of resistance unbalance between each two pairs of the channel, not greater than 200 milliohms or 6%(TBD) which ever is greater. Resistance unbalance between the channel pairs is a measure of the difference of resistance of the common mode pairs of conductors used for power delivery. Channel pair to pair resistance unbalance is defined by …..”
- The 200milliohm above should be 0.1Ω. Why?. Connector max Rdiff= 0.05Ω. 4 connectors is 4*0.05Ω=0.2Ω on each Wire. As a result, a pair is two connectors in parallel ➔ 0.1Ω
  - Connector maximum resistance is 0.2Ω and is not related to the discussion here which is pair to pair resistance difference.

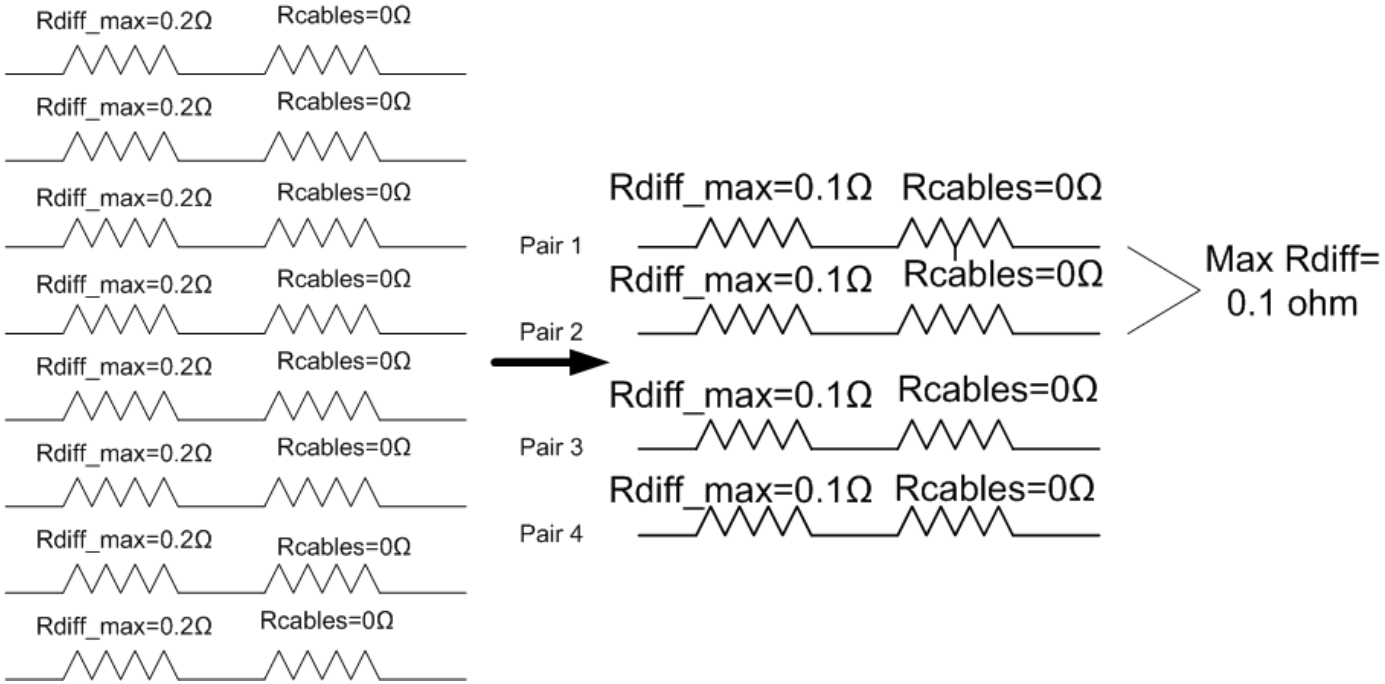

Source: Yair Darshan.
Confirmed by Wayne Larsen

Annex P1: Channel P2PRUNB at Rdiff point

- Channel only Equation:

$$C_P2PRUNB = \left(\frac{\sum R_{\max} - \sum R_{\min}}{\sum R_{\max} + \sum R_{\min}} \right) =$$

$$= \left(\frac{0.5 \cdot (L1 \cdot \rho_1 + L2 \cdot \rho_2 + N \cdot Rc)_{\max} - 0.5 \cdot (L1 \cdot \rho_1 + L2 \cdot \rho_2 + N \cdot Rc)_{\min}}{0.5 \cdot (L1 \cdot \rho_1 + L2 \cdot \rho_2 + N \cdot Rc)_{\max} + 0.5 \cdot (L1 \cdot \rho_1 + L2 \cdot \rho_2 + N \cdot Rc)_{\min}} \right)$$

- The factor 0.5 was left intentionally.
- When L1+L2 approaching to zero:

$$C_P2PRUNB = \left(\frac{0.5 \cdot (N \cdot Rc_{\max} - N \cdot Rc_{\min})}{0.5 \cdot (N \cdot Rc_{\max} + N \cdot Rc_{\min})} \right) =$$

$$= \left(\frac{0.5 \cdot N \cdot Rdiff}{0.5 \cdot (N \cdot Rc_{\max} + N \cdot Rc_{\min})} \right) = 25\% \max$$

For Rc_min=0.03Ω and Rc_diff=0.02 Ω
Rdiff_max for channel: 0.1Ω

Source : Yair Darshan

Annex P2: Channel P2PRUNB at Rdiff point

$$C_P2PRUNB = \left(\frac{0.5 \cdot N \cdot Rc_{\max} - 0.5 \cdot N \cdot Rc_{\min}}{0.5 \cdot \left(N \cdot Rc_{\max} + N \cdot Rc_{\min} \right)} \right) = \left(\frac{0.5 \cdot C_Rdiff_\max}{0.5 \cdot \left(N \cdot Rc_{\max} + N \cdot Rc_{\min} \right)} \right)$$

- Looking at the above equation:
- For C_P2PRUNB, as a parameter that specify the channel behavior, the number of connectors became irrelevant:

$$C_P2PRUNB = \frac{\left(Rc_{\max} - Rc_{\min} \right)}{\left(Rc_{\max} + Rc_{\min} \right)}$$

Ratio ➔ Implementation independent

- However for Rdiff it is relevant:

$$C_P2PRUNB = \left(\frac{0.5 \cdot C_Rdiff_\max}{0.5 \cdot \left(N \cdot Rc_{\max} + N \cdot Rc_{\min} \right)} \right)$$

$$C_Rdiff = 0.5 \cdot N \cdot \left(Rc_{\max} - Rc_{\min} \right) =$$

$$= 0.5 \cdot N \cdot Conn_Rdiff_\max$$

ABS number ➔ Implementation dependent

Source : Yair Darshan

Annex P3: Channel P2PRUNB at Rdiff point

Complete Channel specification:

- (Complete specification is like defining the behavior of equation for its entire operating range and as close as possible to implementation independent)
- For $C_Rdiff > 0.5 \cdot N \cdot Conn_Rdiff_\max = 0.1\Omega$

$$C_P2PRUNB = \left(\frac{(L1 \cdot \rho_1 + L2 \cdot \rho_2 + N \cdot Rc)_{\max} - (L1 \cdot \rho_1 + L2 \cdot \rho_2 + N \cdot Rc)_{\min}}{(L1 \cdot \rho_1 + L2 \cdot \rho_2 + N \cdot Rc)_{\max} + (L1 \cdot \rho_1 + L2 \cdot \rho_2 + N \cdot Rc)_{\min}} \right) = 7.5\% \max$$

- For $C_Rdiff \le 0.5 \cdot N \cdot Conn_Rdiff_\max = 0.1\Omega$

$$C_Rdiff_\max = 0.5 \cdot N \cdot Conn_Rdiff_\max = 0.1\Omega$$

$$C_P2PRUNB_\max = \frac{(Rc_{\max} - Rc_{\min})}{(Rc_{\max} + Rc_{\min})} = 25\%$$

Which ever is greater

Numbers are based on worst case data base numbers

Source : Yair Darshan

Annex Q: Channel Pair to Pair Unbalance Equation

Curve/Equation form of unbalance specifications as opposed to "0.1 Ω or 7.5% which ever is greater" specification)

$$Channel_P2PRUNB = \alpha$$

$$Cable_P2PRUNB = \beta$$

$$Rcable_\min = R_{\min}$$

$$Rcable_\max = R_{\max} = R_{\min} \cdot \frac{(1+\beta)}{(1-\beta)}$$

$$\alpha = \frac{(R_{\max} + N \cdot Rc_{\max}) - (R_{\min} + N \cdot Rc_{\min})}{R_{\max} + N \cdot Rc_{\max} + R_{\min} + N \cdot Rc_{\min}} =$$

$$\alpha = \frac{N \cdot (Rc_{\max} - Rc_{\min}) + R_{\max} - R_{\min}}{N \cdot (Rc_{\max} + Rc_{\min}) + R_{\max} + R_{\min}}$$

For worst case, Using N=4 we get the curve for N=4:

$$\alpha = \frac{R_{\max} - R_{\min} + 0.08\Omega}{R_{\max} + R_{\min} + 0.032\Omega}$$

n	Rcable min [ohm]	Channel Runb
0	Any	5.00%
1	0.266	7.50%
2	0.532	7.50%
3	0.798	7.50%
4	1.064	7.50%

Pair resistance is half the value

Source : Yair Darshan.

- Showing at which cable minimum resistance the curve crosses predefined border line for different number of connectors.
- N=0, 1, 2, 3, and 4
- Rc_max=0.05Ω ,Rc_min=0.03 Ω .

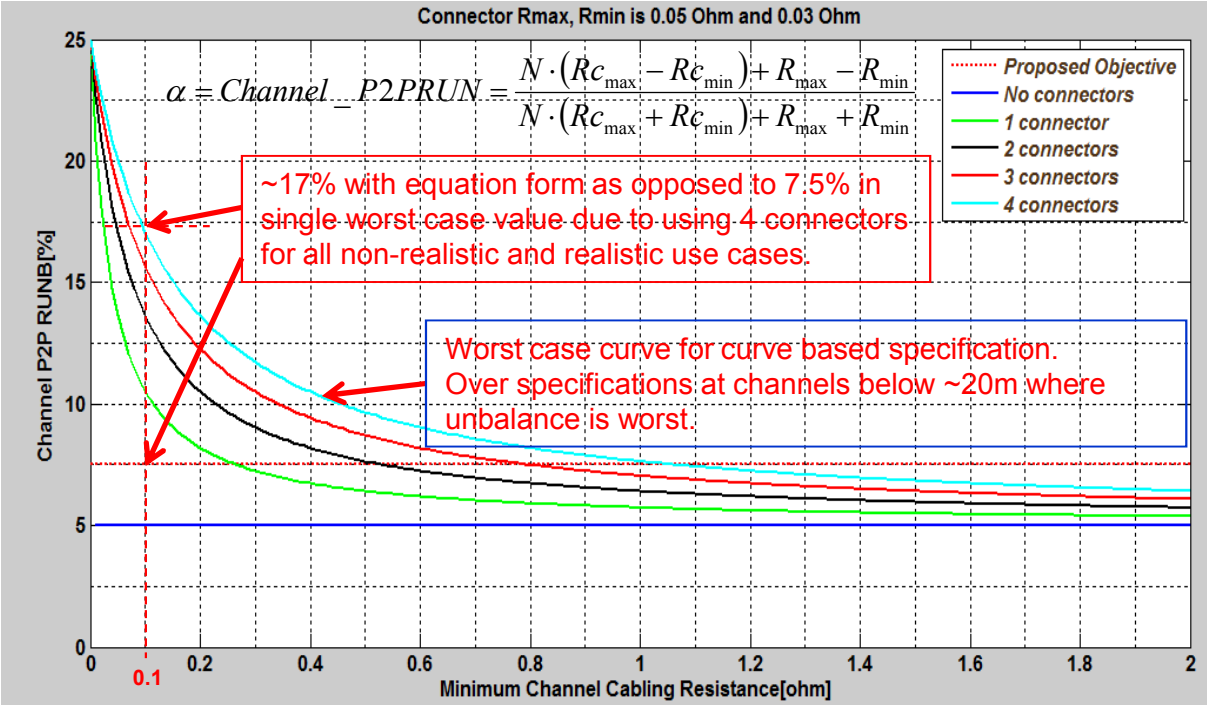

Annex Q1: Channel Rmin vs. Channel P2PRUNB and number of connectors

Source : Yair Darshan.
Verified by analytical solution and simulations

$$Channel_P2PRUNB = \alpha$$
$$Cable_P2PRUNB = \beta$$
$$Rcable_\min = R_{\min}$$
$$Rcable_\max = R_{\max} = R_{\min} \cdot \frac{(1+\beta)}{(1-\beta)} = R_{\min} \cdot \delta$$
$$\alpha = \frac{(R_{\max} + N \cdot Rc_{\max}) - (R_{\min} + N \cdot Rc_{\min})}{R_{\max} + N \cdot Rc_{\max} + R_{\min} + N \cdot Rc_{\min}} =$$
$$\alpha = \frac{N \cdot (Rc_{\max} - Rc_{\min}) + R_{\min} \cdot (\delta - 1)}{N \cdot (Rc_{\max} + Rc_{\min}) + R_{\min} \cdot (\delta + 1)} =$$
$$\alpha \cdot (N \cdot (Rc_{\max} + Rc_{\min}) + R_{\min} \cdot (\delta + 1)) = N \cdot (Rc_{\max} - Rc_{\min}) + R_{\min} \cdot (\delta - 1)$$
$$\alpha \cdot N \cdot (Rc_{\max} + Rc_{\min}) + \alpha \cdot R_{\min} \cdot (\delta + 1) = N \cdot (Rc_{\max} - Rc_{\min}) + R_{\min} \cdot (\delta - 1)$$
$$\alpha \cdot R_{\min} \cdot (\delta + 1) - R_{\min} \cdot (\delta - 1) = N \cdot (Rc_{\max} - Rc_{\min}) - \alpha \cdot N \cdot (Rc_{\max} + Rc_{\min})$$
$$R_{\min} \cdot (\alpha \cdot (\delta + 1) - (\delta - 1)) = N \cdot (Rc_{\max} - Rc_{\min}) - \alpha \cdot N \cdot (Rc_{\max} + Rc_{\min})$$
$$R_{\min} = \frac{N \cdot (Rc_{\max} - Rc_{\min}) - \alpha \cdot N \cdot (Rc_{\max} + Rc_{\min})}{\alpha \cdot (\delta + 1) - (\delta - 1)}$$

- Rmin is given as round loop value.
- Rc_max=0.05 ,Rc_min=0.03, β=Cable_P2PRUNB=5%
- Channel_P2PRUNB=α=7% as an example.

$$R_{\min} = \frac{N \cdot (Rc_{\max} - Rc_{\min}) - \alpha \cdot N \cdot (Rc_{\max} + Rc_{\min})}{\alpha \cdot (\delta + 1) - (\delta - 1)}$$

n	Rcable min [ohm]	Channel Runb
0	Any	5.00%
1	0.342	7.00%
2	0.684	7.00%
3	1.026	7.00%
4	1.368	7.00%

Pair resistance is half the value

Annex R: End to End Channel P2PRUNB vs Channel P2PRUNB

- Using adhoc database values for components. Annex G1.
- The high C_P2PRUNB at short cable at short cable is dominate by PSE PI and PD PI components.

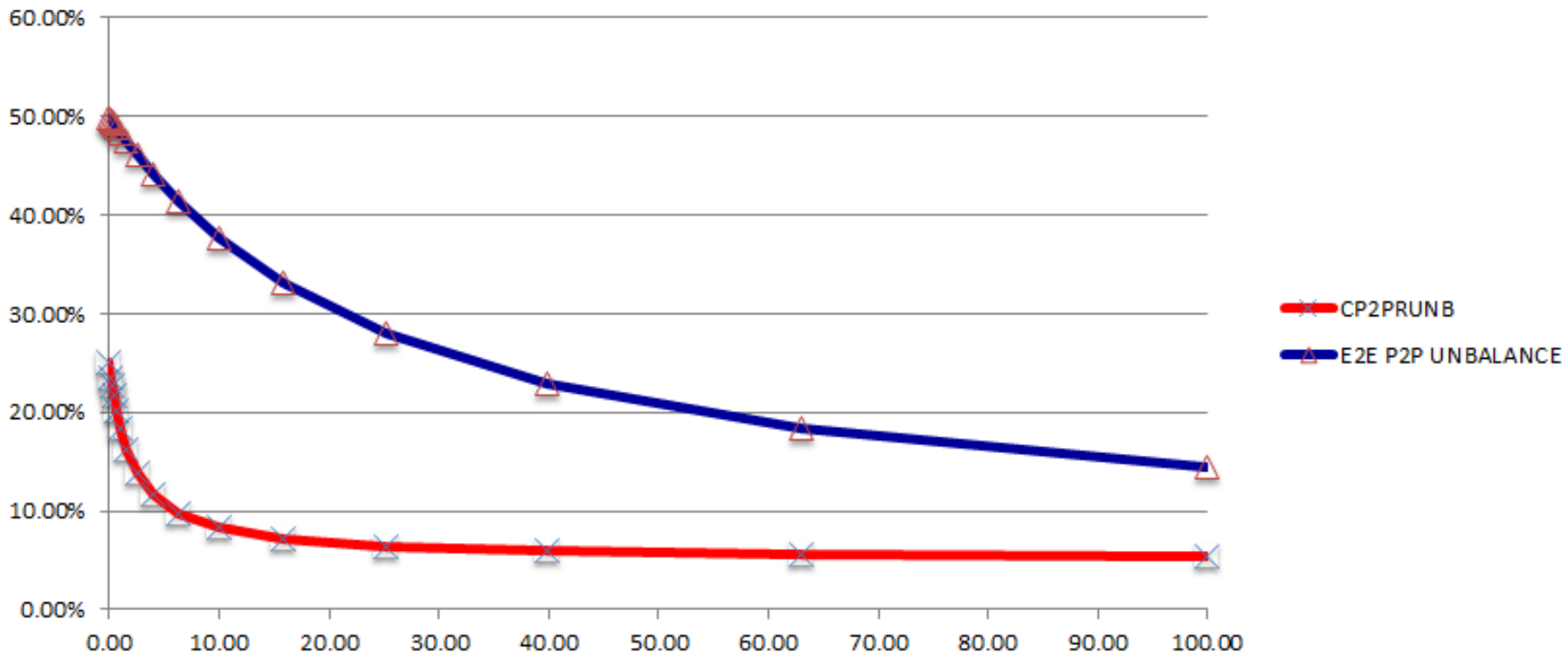

Annex R1: Maximum pair current
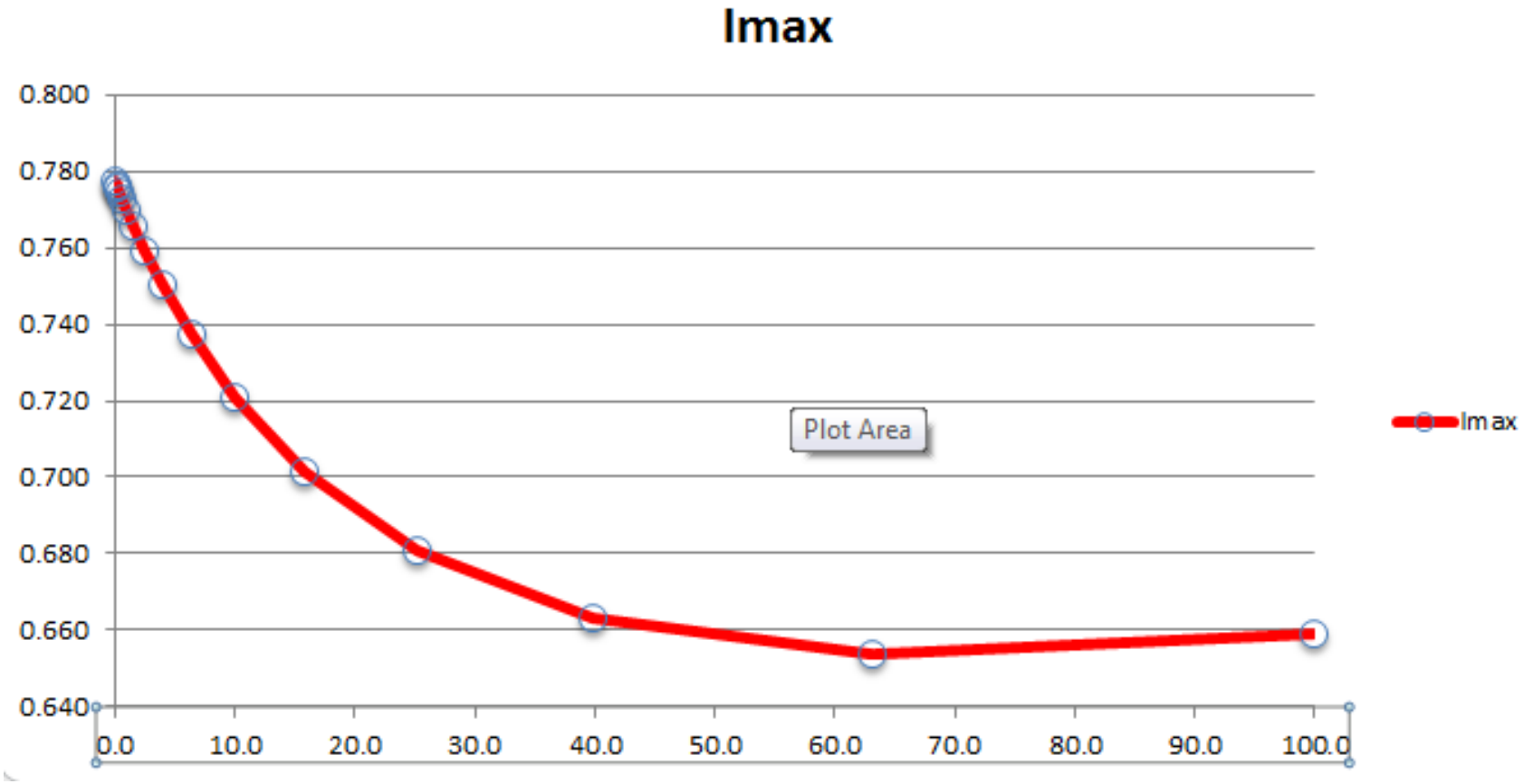
- Using adhoc database values for components. Annex G1.
- The high C_P2PRUNB at short cable at short cable is dominate by PSE PI and PD PI components.