IEEE802.3 4P Task Force

# Channel Pair To Pair Resistance Imbalance

(End to End System Imbalance)

# Ad Hoc

July 2014

Meeting #1: Rev_001 Monday February 17, 2014
Meeting #2: Rev_001b Monday February 24, 2014
Meeting #3: Rev 004, Thursday April 24, 2014
Meeting #4: Rev 005, Thursday May 1, 2014
Meeting #5: Rev 006, Thursday May 8, 2014
Meeting #5: Rev 008, Thursday May 8, 2014, Ad-hoc report for May 2014 meeting.
Meeting #6: Rev 009, Thursday May 15,2014 , Norfolk VA.
Meeting #7: Rev 010, Tuesday June 10, 2014 ,
Meeting #8: Rev 011a, Tuesday June 24, 2014.
Meeting #9: Rev 012b, Tuesday July 1, 2014.

Yair Darshan
Microsemi
ydarshan@microsemi.com

# Meeting # 9 Attendees (July 24, 2014)

- Please send email after the meeting to confirm your attendance.

# Proposed Agenda, Meeting #9, July 1, 2014.

- Introduction, Patent policy (1 minute)
- Reviewing A.I. from meeting #8. (4 minutes)
- Planes for July 2014 IEEE meeting (5 minutes)
- Where we are and where we are going? (5 minutes)
- Reviewing Yair Darshan Presentation (20minutes)
- Reviewing Jeff Heat Presentation (20 minutes)
- Summary and Action Items (5 minutes)
- Reviewing Yair, Ken others presentation regarding PSE and PD PI models was postpone to next adhoc meeting or during IEEE July meeting pending available time.

# Introduction

- The purpose of this ad-hoc is to recommend the Task-Force for what is needed to specify the channel pair to pair resistance unbalance while considering not only the formal channel components (Cable and Connector) but also the Power Interface (PI) components at both ends of the 4P PoE system.

- Patent Policy

-Please read the Patent Policy slides at http://www.ieee802.org/3/patent.html prior the meeting.

# Reviewing A.I status from meeting #8

| # | A.I. | Status |
|---|---|---|
| 1 | Group to send any questions to the reflector. | |
| 2 | To clearly state what will be the PSE and PD parameters that will be define. Group to review and comment over the reflector. | Done. |
| 3 | Updated Data Base Table was reviewed and approved by the ad-hoc on meeting #8.<br>See Annex G1, G2 and G3.<br>Diode parameters final range is under investigation. Mean while we will use the current values. | Done.<br>Any questions to send to reflector. |
| 4 | How we address P2PRUNB vs Temperature. See annex M. | Done |
| 5 | To comment on Ken presentation over the reflector | |
| | | |
| | | |
| | | |

# Planes for July 2014 IEEE meeting

| # | Item |
|---|---|
| 1 | To have a motion to that specifies the TBDs in the Channel P2PRUNB base line text. |
| 2 | To have a motion on the test conditions of how the channel P2PRUNB will be tested |
| 3 | To discuss PSE PI and PD PI possible models based on solid math that covers the affecting parameters with implementation independent approach. |
| 4 | *To have motion that PSE_PI and PD_PI will be specified by at least two parameters: P2PRUNB and P2P voltage difference. Each parameter will have single number that represent its maximum value.* |
| 5 | *To discuss Ken proposal for defining Rmin and Rmax for PSE PI and PD PI* |
| 6 | *??* |

Group to propose other issues that we should discuss.

# Where we are and where we are going -1

Ad-hoc response, July 1, 2014. TBD

***For PSE and PD PIs P2P UNB parameters.***

-a single maximum number for each parameter.

-Parameters are: Voltage and resistance unbalance.

-We may need to defined additional parameter: Rmin with TBD accuracy.

-Test setup TBD.

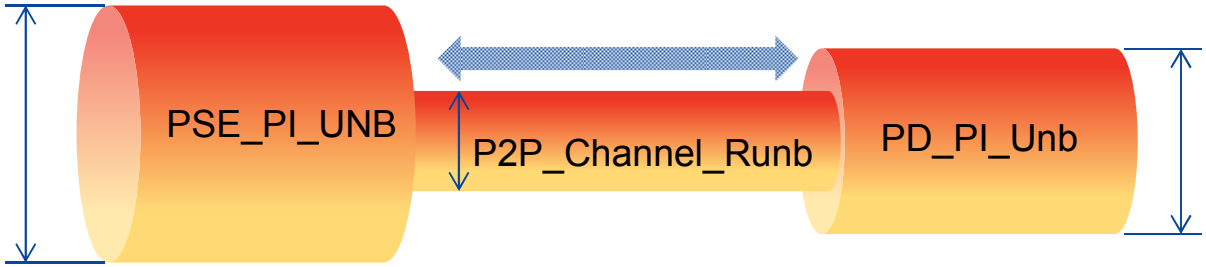


**For Channel P2PRUNB:**

-Variable Channel Length, number of connectors up to 4.

-A single maximum number representing maximum Runb. (Target 7% (TBD) or 0.2Ω which ever is greater).

-During compliance tests of the channel for P2PRUNB, we may need to add external resistance of 0.2 Ω (TBD) per pair to filter C_P2PRUNB peaks that twill be disappear when channel will be inserted in the system (PSE and PD PI) and the peaks will be replaced by PSE and PD PI effects.

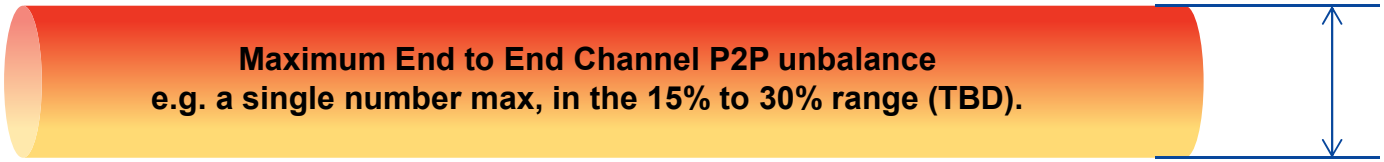


- Channel capable of regulating/reducing of end to end unbalance as function of channel length.
- PD PI need to be better than PSE PI due to its higher effectiveness on end to end unbalance (TBD)
- PSE PI needs larger unbalance range to allow different implementations (TBD)

# Where we are and where we are going -2

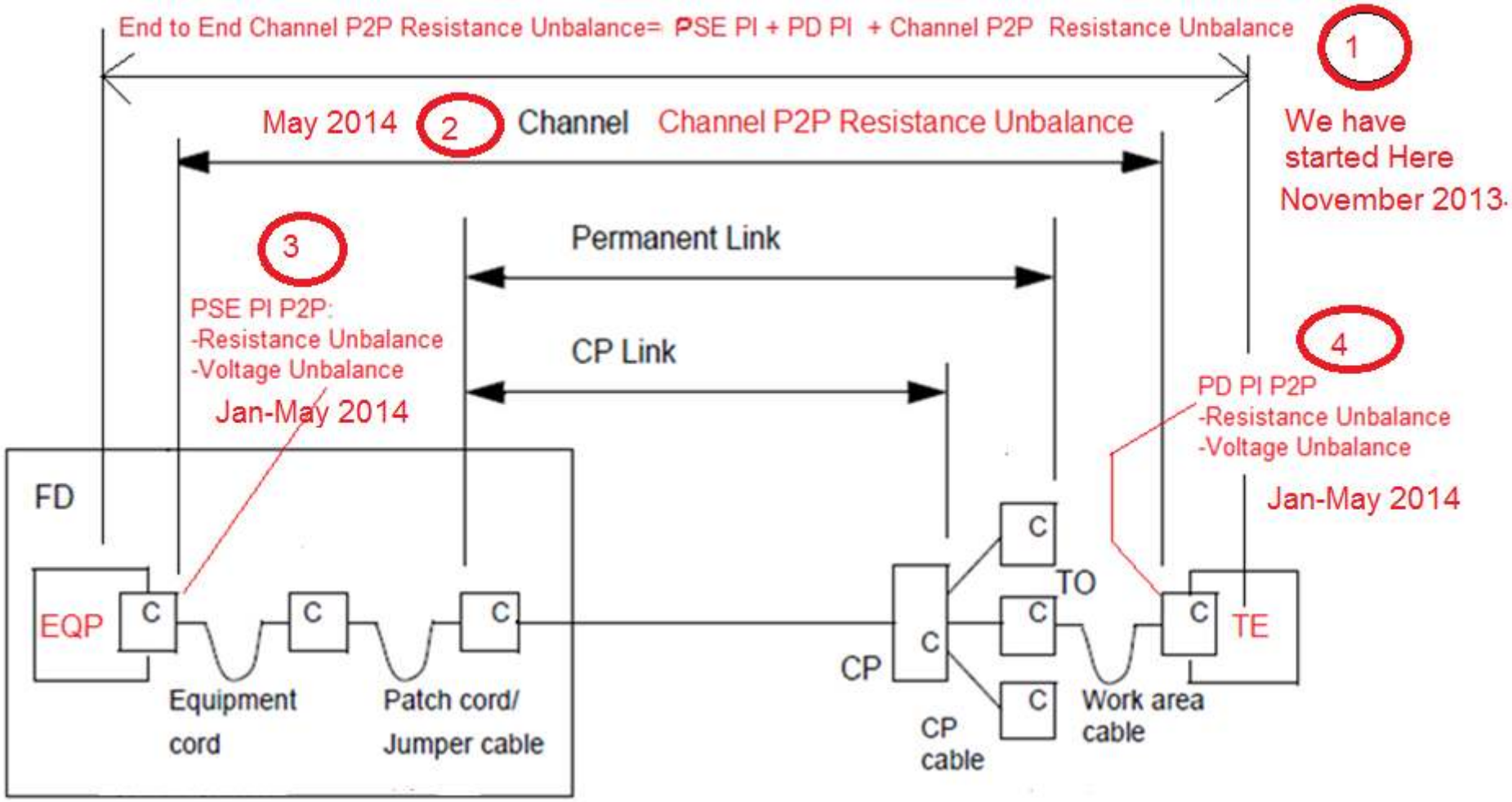


Figure 1. May 27, 2014

Ad-hoc response, June 24, 2014. No comments.

Source: Yair Darshan. Based on model used in IEEE802.3-2012.

# Where we are and where we are going? -3

| # | Parameter | Part of the spec. | Status |
|---|---|---|---|
| 1 | End to End Channel Pair to Pair Resistance Unbalance | No | -We have worst case numbers based on worst case data base.<br>-Database is updated on the fly. |
| 2 | Channel Pair to Pair Resistance Unbalance. See figure 1 | Yes.<br>We hope also to reference cabling standard when its ready. | -Baseline text motion passed. numbers 0.2Ω, 6% max (TBD)<br>-Working on 7% target. |
| 3 | PSE PI Pair to Pair Resistance Unbalance | Yes | -Consensus that P2P resistance unbalance need to be specified together with Voltage unbalance.<br>-Models being discussed for testing, no complete work yet.<br>-Numbers need to be derived from (1) and (2). |
| 4 | PD PI Pair to Pair Resistance Unbalance | Yes | |

We agree that the above parameters will be calculated/defined at room temperature or close to it (see details next slide).

There is a consensus that the temperature will be 20°C. Ad-hoc to confirm on meeting #7

**Ad-hoc response, June 10, 2014. Ad hoc agrees to set temperature of P2PUNB numbers at 20degC.**

# Where we are and where we are going? -4

- End to End Channel P2P RUNB.
  - Using Annex F model.
  - Ignoring Vdiff in PSE PI and PD PI for simplicity. Later their effects will be added.

$$E2E_C_P2PRUNB = \frac{\sum R\max - \sum R\min}{\sum R\max + \sum R\min} =$$

$$= \frac{R_{pse_\max} + R_{pd_\max} + R_{ch_\max} - R_{pse_\min} - R_{pd_\min} - R_{ch_\min}}{R_{pse_\max} + R_{pd_\max} + R_{ch_\max} + R_{pse_\min} + R_{pd_\min} + R_{ch_\min}} =$$

$$= \frac{(R_{pse_\max} - R_{pse_\min}) + (R_{pd_\max} - R_{pd_\min}) + (R_{ch_\max} - R_{ch_\min})}{\sum R\max + \sum R\min} =$$

Ad-hoc response, June 24, 2014. TBD

$$E2E_C_P2P_RUNB = \frac{(R_{pse_\max} - R_{pse_\min})}{\sum R\max + \sum R\min} + \frac{(R_{pd_\max} - R_{pd_\min})}{\sum R\max + \sum R\min} + \frac{(R_{ch_\max} - R_{ch_\min})}{\sum R\max + \sum R\min}$$

Source: Yair Darshan.

# Where we are and where we are going? -5

- How to specify PSE and PD PI?
  - Step A: Analytical calculations first (step A) and then verify it by simulation (step B) or lab tests.

Analytical Calculations.

Ad-hoc response, June 24, 2014. TBD

$$\frac{(R_{pse_\max} - R_{pse_\min})}{\sum R\max + \sum R\min} + \frac{(R_{pd_\max} - R_{pd_\min})}{\sum R\max + \sum R\min} + \frac{(R_{ch_\max} - R_{ch_\min})}{\sum R\max + \sum R\min} =$$

$$Kpse \cdot \frac{(R_{pse_\max} - R_{pse_\min})}{\sum R\max + \sum R\min} + Kpd \cdot \frac{(R_{pd_\max} - R_{pd_\min})}{\sum R\max + \sum R\min} + Kch \cdot \frac{(R_{ch_\max} - R_{ch_\min})}{\sum R\max + \sum R\min}$$

Find Kpse, Kpd and Kch that meets the limits of step 1.

Kxx may be a Vandermonde matrix for perfect fitting or scalar (single equation) for worst case points only.

Step B: Lab Test

-Step 1: Set target End to End Voltage and resistance unbalance max limits.

-Step 2: Find/define convenient, practical PD max. unbalance parameters

-Step 3: Use calculated Channel maximum Runb.

-Step 4: Change PSE PI Vdiff_max, Rdiff_max, Rmin parameters to achieve maximum Runb until the limits of Step 1 is crossed.

Source: Yair Darshan.

IEEE802.3 4P Task Force

# Channel Pair To Pair Resistance Unbalance

(CP2PRUNB)

(only cables and connectors)

# Analysis of ad-hoc proposed use cases

July 2014

rev 12b

**Supporters:**

Larsen, Wayne / Commscope

David Tremblay / HP

Fred Schindler / Seen Simply

Others are welcomed to join.

Yair Darshan

Microsemi

ydarshan@microsemi.com

# Objectives: Channel P2P RUNB-Addressing TBDs

- In May 2014 we vote for the following base line text highlighting the TBD areas.

33.1.4.3 Channel Requirement for Pair to Pair Resistance unbalance

4P pair operation requires the specification of resistance unbalance between each two pairs of the channel, not greater than 200 milliOhms or 6%(TBD) which ever is greater. Resistance unbalance between the channel pairs is a measure of the difference of resistance of the common mode pairs of conductors used for power delivery. Channel pair to pair resistance unbalance is defined by …..”

---

- I believe that the 200miliOhm above should be 100miliOhm due to the fact that it is a pair consisting of two connectors in parallel. 4*50miliohm=0.2Ω. Two in parallel=0.1Ω.
- **Note: Currently the whole presentation was based on a round loop model as channel would be in the system. Next revision I will change it to a channel pair to pair model which is the relevant case for the channel only. This will reduce the P2PRUNB peaks by 2-3 % e.g. from 19% to 16-17%. Update will be sent after the meeting. Under research.**
- The analysis in the following slides is based on use case data proposed by the ad-hoc in previous meetings.

# Presentation Flow

| Step | Analyzing the proposed use cases |
|---|---|
| 1 | Compare analysis results of proposed use case to last motion Channel P2PRUNB proposal of 6% (TBD) |
| 2 | Showing that the actual results are higher than 6% |
| 3 | Understanding the reasons and rational behind the results from different angles and as function of channel parameters |
| 4 | Setting initial objective of 7% and determine what we need to do to meet this objective. A low limit provides margins to PD and PSE PI and is used were is needed. |
| 5 | Discussion on the proposed list of solutions to achieve the 7% objective (item 4, or different objective) |

# Channel Component Data used in this work

| # | Component | Value | Reference |
|---|---|---|---|
| 1 | Patch Cord | 0.14Ω/m | Adhoc, Standard. |
| 2 | Horizontal Cable | CAT6A AWG23 | 1. Adhoc<br>2. See Annex G1, G2, G3, E1<br>3. See Slide “Annex K20” |
| 3 | Connector | Rmin=0.03Ω<br>Rdiff_max=0.02Ω<br>Rmax=0.06Ω | 1. Rdiff (TBD) : Adhoc<br>2. Rmin, Rmax: Adhoc<br>3. See Annex G1, G2, G3, E1-E6<br>4. See Slide “Annex K20” |

**Questions such:**

1. Why not to use 0.098 Ω/m as per standard etc. are answered in annexes above. If more data is needed, please addressee this question to the reflector.
2. Why not use Rmax=0.2Ω and Rdiff_max=0.05Ω for connector? Answer: It is maximum values and for worst case analysis we need minimum values for Rmax and Rmin and a maximum practical values for Rdiff.
3. The conclusions that was derived from the analyzed topics in this work topics, will not change dramatically for other practical data number sets.

# Use cases to be checked during analysis

- **From previous ad-hoc meetings decisions:** To check use cases A, B, C and D per the table below for Channel P2PRUNB specification derivation.
- Additional use cases were added (total 16) after running the simulations in order to find Channel P2PRUN hidden peaks.
- Table below provides a summary. **See details next slides.**

| Use case | Connectors | Cordage[m] | Cable[m] | Max. Channel P2PRUN |
|---|---|---|---|---|
| **A** | 0 | ≥0.15 | 0 | 5% (equal to Cable P2PRUNB) |
| | 0 | 0 | ≥0.15 | |
| 2,6<br>6-12 | 1, 2<br>1,2,4 | See curve next slide | | 9%/16% /19% (Other use cases, not in the list proposed by the ad-hoc however cannot be ignored since we cannot control field use cases, so we need to discuss it to know how to address it) |
| **B** | 2 | 1 | 3 | 8.9% |
| **C** | 4 | 8 | 15 | 6.47% |
| **D** | 4 | 10 | 90 | 5.45% |

See curve next slide for more data

# Use case analysis results and proposed objective

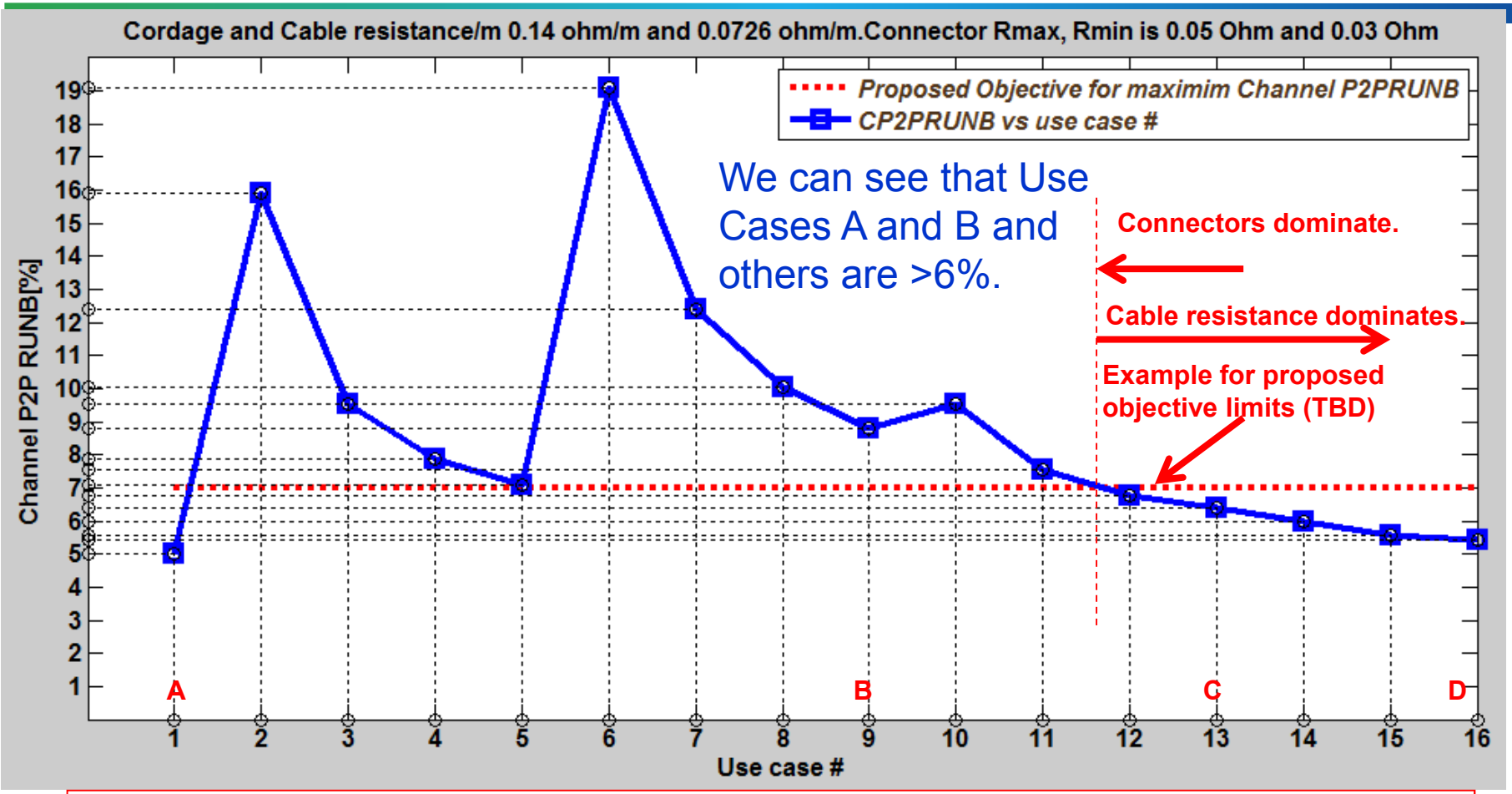


| | A | | | | | | | | B | | | | C | | | D |
|---|---|---|---|---|---|---|---|---|---|---|---|---|---|---|---|---|
| | [1, | 2, | 3, | 4, | 5, | 6, | 7, | 8, | 9, | 10, | 11, | 12, | 13, | 14, | 15, | 16]; Use Case Number |
| n = | [0, | 1, | 1, | 1, | 1, | 2, | 2, | 2, | 2, | 4, | 4, | 4, | 4 | 4, | 4, | 4]; number of connectors |
| L1= | [0.15, | 0.25, | 0.5, | 0.75, | 1, | 0.25, | 0.5, | 0.75, | 1, | 2, | 4, | 6, | 8, | 8, | 9, | 10]; Cordage[m] |
| L2= | [0, | 0, | 1, | 2, | 3, | 0, | 1, | 2, | 3, | 4, | 8, | 12, | 15, | 30, | 60, | 90]; Cable[m] |

# Channel P2PRUNB vs. Use case parameters

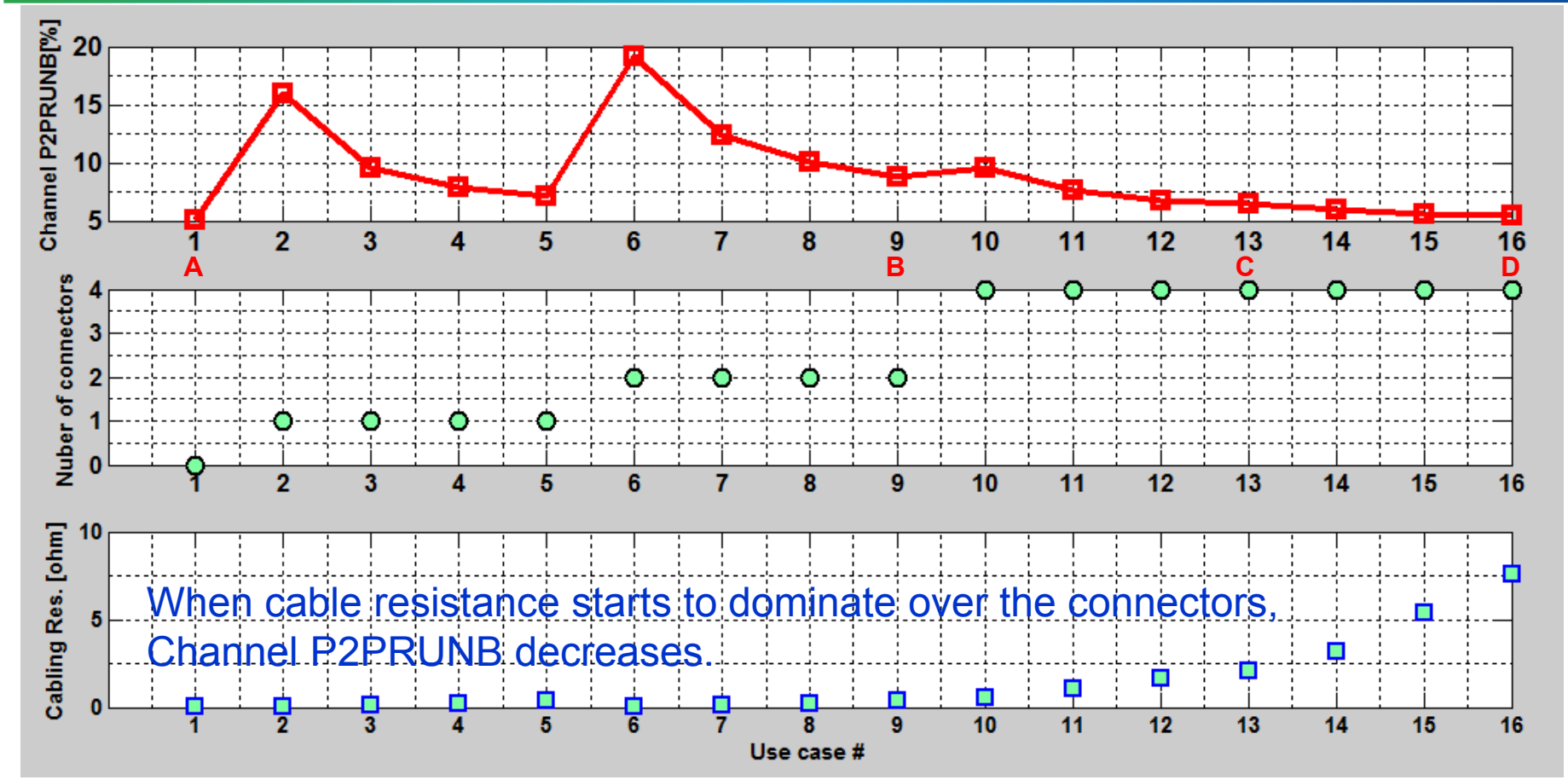


| | | | | | | | | | | | | | | | | |
|---|---|---|---|---|---|---|---|---|---|---|---|---|---|---|---|---|
| | A | | | | | | | | B | | | C | | | D | |
| | [1, | 2, | 3, | 4, | 5, | 6, | 7, | 8, | 9, | 10, | 11, | 12, | 13, | 14, | 15, | 16]; Use Case Number |
| n = | [0, | 1, | 1, | 1, | 1, | 2, | 2, | 2, | 2, | 4, | 4, | 4, | 4 | 4, | 4, | 4]; number of connectors |
| L1= | [0.15, | 0.25, | 0.5, | 0.75, | 1, | 0.25, | 0.5, | 0.75, | 1, | 2, | 4, | 6, | 8, | 8, | 9, | 10]; Cordage[m] |
| L2= | [0, | 0, | 1, | 2, | 3, | 0, | 1, | 2, | 3, | 4, | 8, | 12, | 15, | 30, | 60, | 90]; Cable[m] |

Annex K8

# Channel P2PRUNB vs. Cable Minimum resistance and number of connectors. -1.

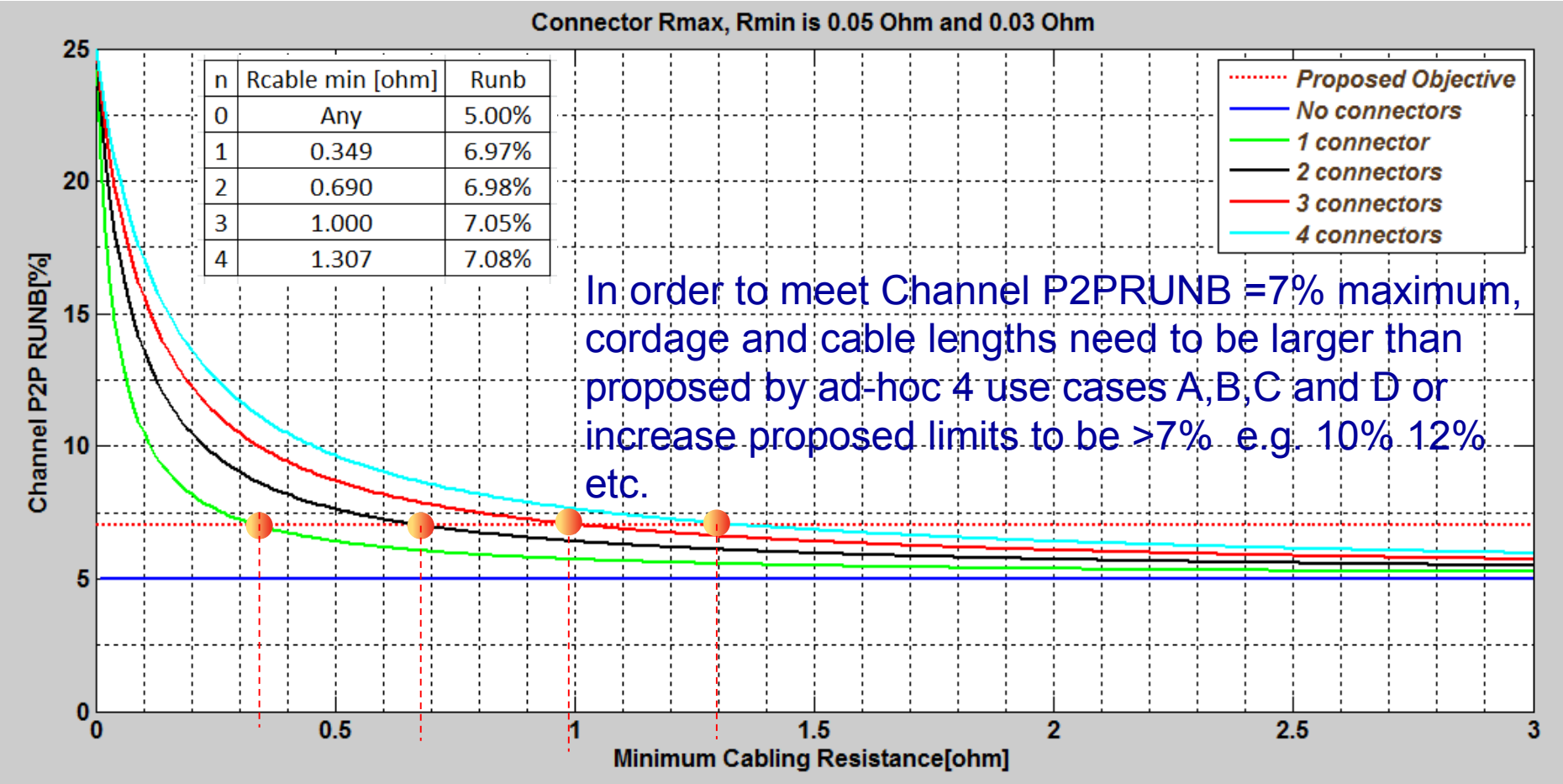


| n | Rcable min [ohm] | Runb |
|---|---|---|
| 0 | Any | 5.00% |
| 1 | 0.349 | 6.97% |
| 2 | 0.690 | 6.98% |
| 3 | 1.000 | 7.05% |
| 4 | 1.307 | 7.08% |

- Connector P2PRunb=(50-30)/(50+30)=0.25
- Cable P2PRUNB=5%.
- Channel P2PRUNB: See 5 curves with different connector numbers

Annex K9

# Channel P2PRUNB vs. Cable Minimum resistance and number of connectors. -2.

- If we set Channel P2PRUNB limit to 7%, this requires cordage and cable lengths **larger that proposed in ad-hoc use cases**.

- If we cannot require larger cordage and cable length as a minimum requirement for the channel, then we need to use much higher limits as high as 19%, **which is not good for our objective i.e**.:

**a)** to move design margins to the PSE and PD PIs.

**b)** In addition, higher limits in the channel, in addition to the PSE and PD limits which will be higher than the channel, will results with total higher end to end P2PRUNB which results with higher current and higher current unbalance.

- Other solutions are presented later.

# Use case analysis results – Sanity Check -1.

## Filtering the main problem by Changing **X axis for Cabling Minimum resistance**

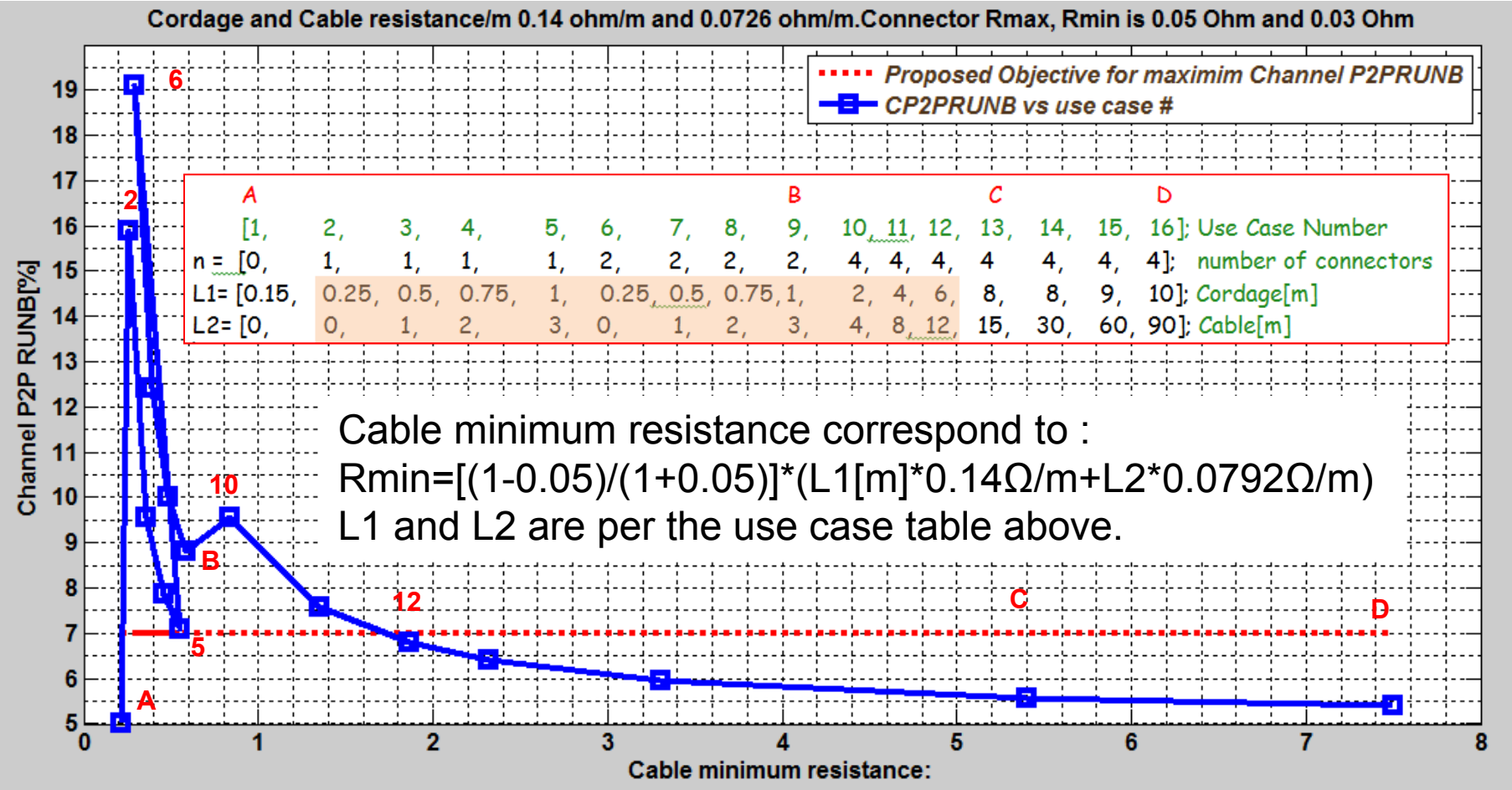


- All peaks now are concentrated in minimum cabling resistance region.
- Minimum total cabling resistance of ~1.75 Ω is required to reduce all CP2PRUNB peaks to below 7% (L1+L2=18m total per use case 12 in the table above).
- .

Annex K11

# Use case analysis results – Sanity Check -2.

## Filtering the main problem by Changing **X axis for Channel Resistance Difference.**

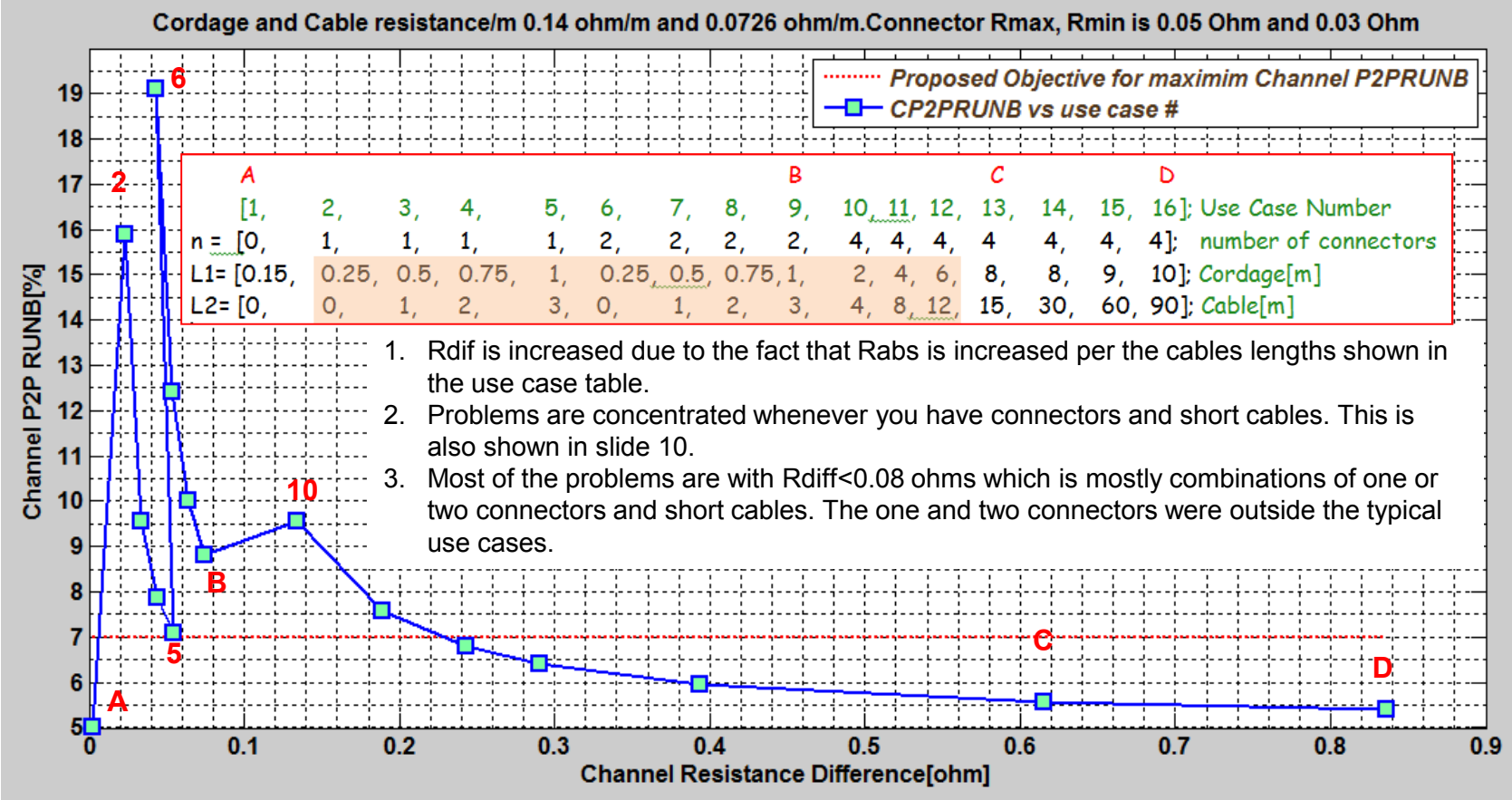


- Using different X axis that shows where the problems are concentrated.
- Checking the 4 use case from the table A,B,C and D.
- (My opinion) We can't control all use case combinations such 1 connector use case (e.g. Use case #2, etc.). We need to find ways to reduce use cases 2, 6, B and 10 peaks.

# Proposed solution + seeing the big picture

- Checking the effect of adding external minimum resistance to the channel for only during Channel P2PRUNB compliance tests.
- It will give us  a direction for possibilities to specify Channel P2PRUNB with reasonable limits without worrying about P2PRUNB peaks that may not exist when the 4P channel is in the system i.e. connected to PSE and PD PIs.
  - The external resistor values exists already in the PSE and PD PIs. We will make sure later that it will be counted only once when the PSE PI and PD PI will be defined.
  - We will show also how all limits of Channel, PSE and PD PI integrated together to meet our end to end objective limits.

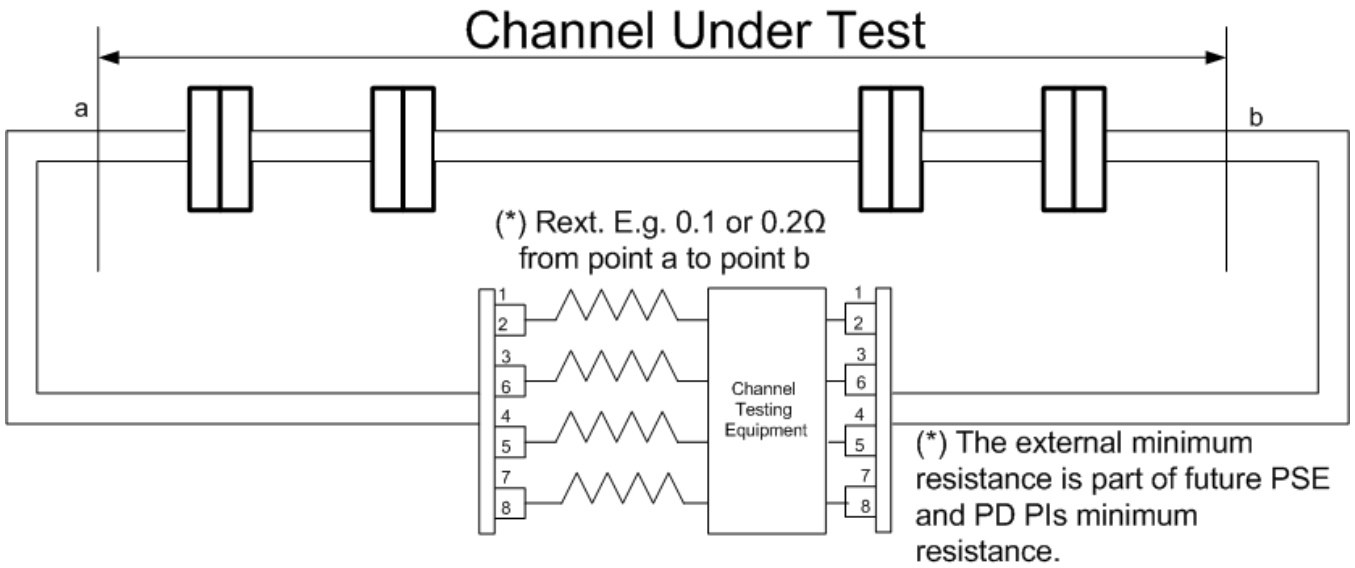

Annex K13

# Use case analysis results when adding external minimum resistance requirement per pair for filtering C_P2PRUNB peaks during: (a) During Channel Compliance test for C_P2PRUNB. (b) PSE and PD PI).

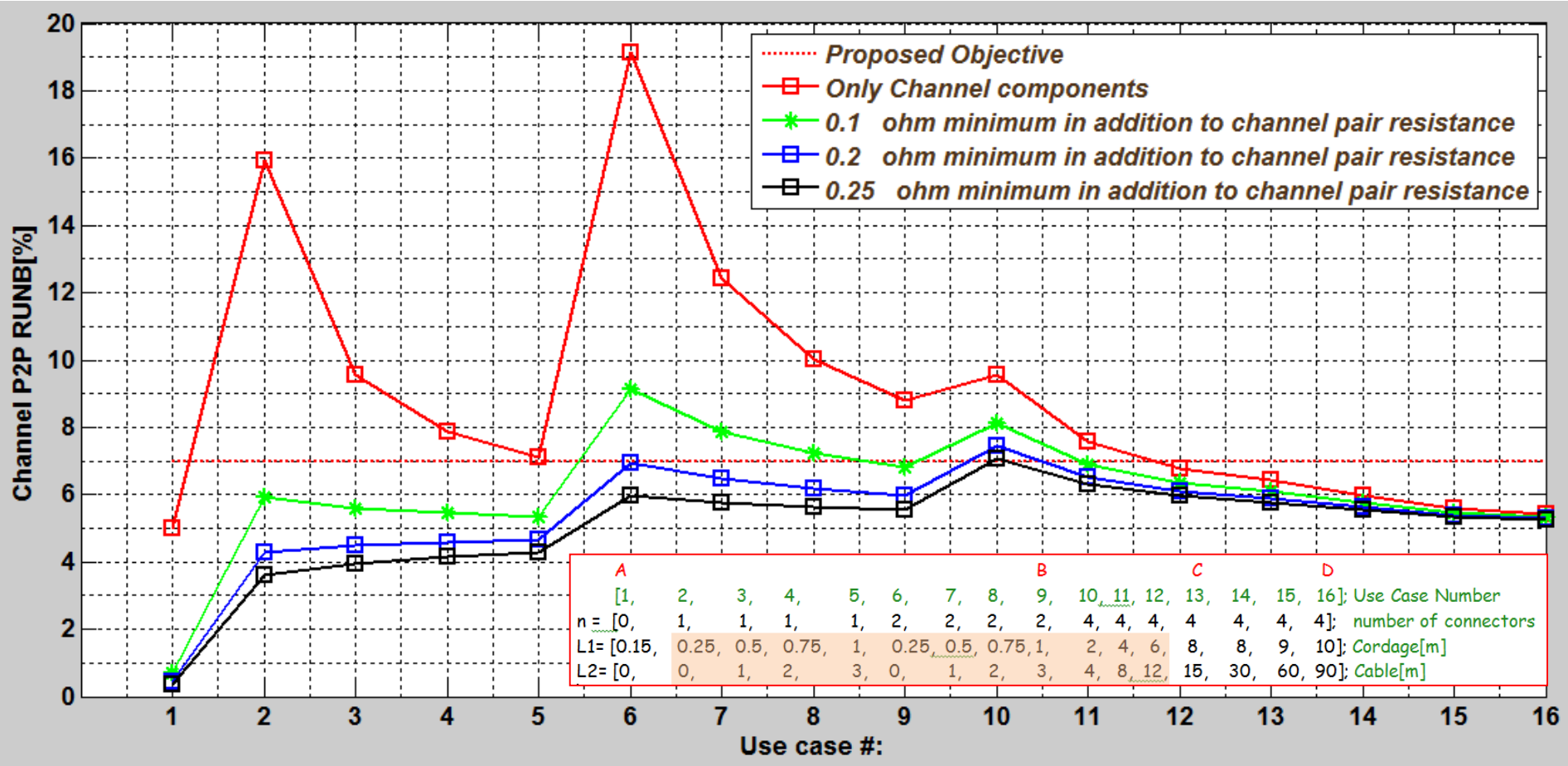


- The peaks are filtered when channel is tested with some minimum resistance that exists anyway in PSE and PD PIs. It is equivalent to testing the channel in some minimum system conditions and not just as a channel which is meaningless without minimum requirements from PSE and PD PIs. (C_P2PRUNB in 2P system it is irrelevant and in 4P system it is meaningless outside the system)

Annex K14

# The CP2PRUNB per use case, vs. external minimum pair resistance added to the channel.

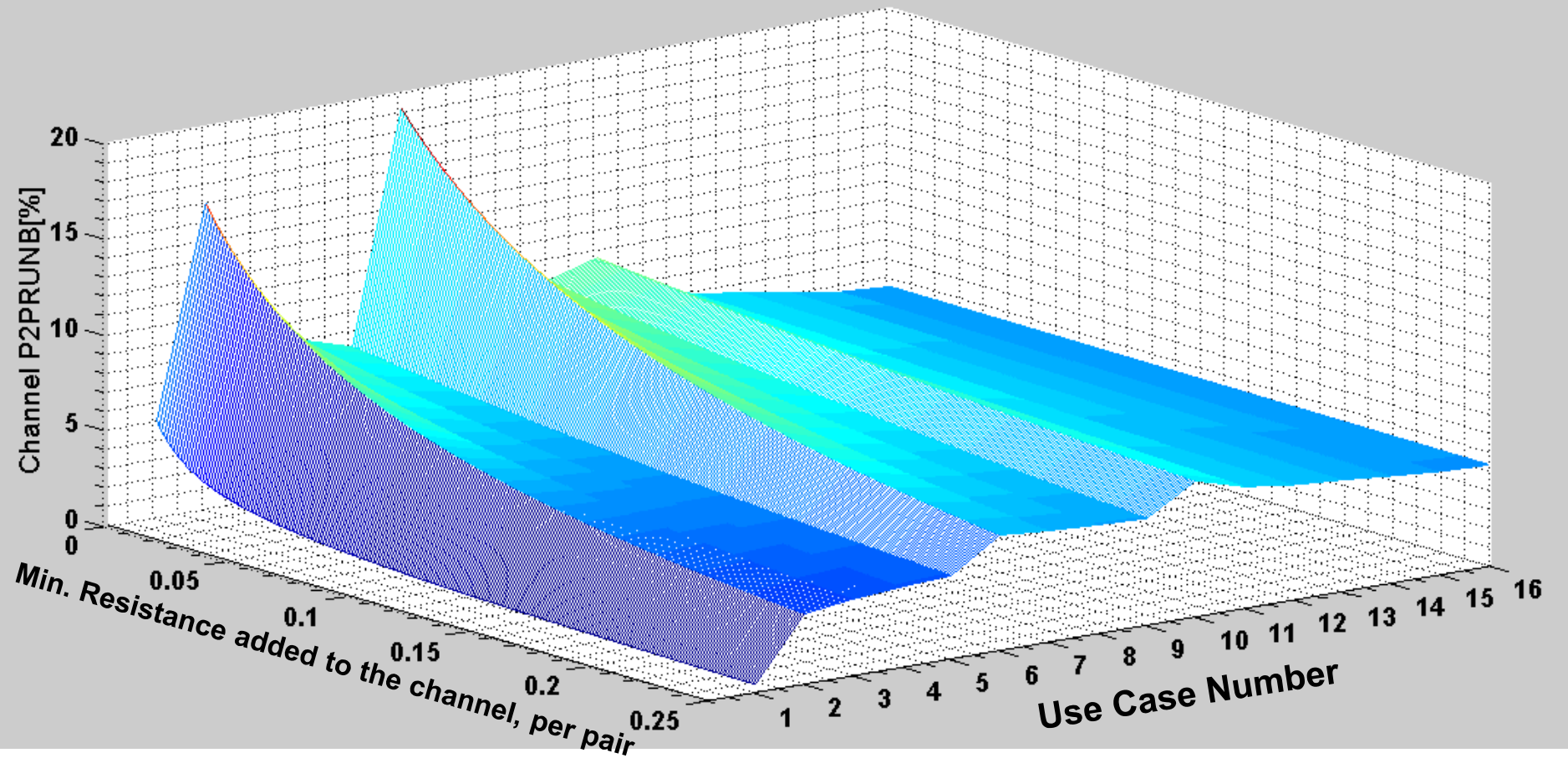


- The additional resistance added, is for channel compliance test to "filter" use cases that doesn't exist on channel as stand alone component. It will be the perfect real life test setup for the Channel P2PRUNB based on additional existing system parts (PSE and PD PIs.).
- More over, we must have minimum resistance definition in the PSE and PD PIs for complete mathematical and practical solution.

# Summary - 1

- In all use cases, 0.14Ω/m was used for cordage.
- All use cases was calculated with cable resistance per meter of:
  - (a) 0.0792Ω/m (CAT6A cable with AWG#23 wire).
  - (b) 0.098 Ω/m per standard.
  - (c) 0.117 Ω/m for maximum channel resistance of 12.5 Ω/100m with 4 connectors.
  - **For worst case analysis of P2PRUNB and maximum current we need to use only (a) and (c). (b) is not important for worst case analysis.**
  - **For the current work of Channel P2PRUN only (a) is important.**
- We got >9% P2PRUNB according the recommended use cases list. More over it can get to 19% if other use case combinations are tested which mean that we need more robust specification resulting with more requirements.
- It is proposed to aim for 7% (or a bit higher (TBD)) maximum so all margins will go to PSE and PD PI requirements. The question is how we do it with the analysis results shown in this work? (see next slide)

# Summary - 2

| # | Solution | Pro's & Con's |
|---|---|---|
| 1 | Set higher spec. limits than the motion suggests 6% (TBD) e.g. 10% or 19%. | **Pro's:**<br>• Channel length/resistance/# of connectors implementation independent.<br>**Con's:**<br>• Will increase the overall end to end channel P2P unbalance and maximum pair current.<br>• Less margins for PSE and PD PI limits.<br>• Channel peak limits at short cable has no practical value when channel is a stand alone component.<br>• Lowest cost effectiveness approach for the system |
| 2 | Set to 7% limit **and justify** why the peaks can not be real per the proposed 4 use cases? | **Pro's:**<br>• ????? After you justify…<br>**Con's:**<br>• We can't control what user will do.<br>• There are more that 4 use cases with even higher peaks. |
| 3 | Set to 7% and specify minimum cable resistance when 4P system are used. Add information to normative section. | **Pro's:**<br>• Filter all peaks and meet target<br>• **Con's:**<br>• Same as option 2. |
| 4 | Set to 7%. Test setup for channel P2PRUNB compliance tests shall include minimum resistance per pair to (0.1Ω or 0.2Ω (TBD))account for the minimum effect of PSE and PD PI on filtering Channel related P2PRUNB peaks that will be "replaced" by PSE and PD PI unbalanced parameter effects. | **Pro's:**<br>• Channel length/resistance/# of connectors became implementation independent.<br>• *No additional requirements to existing 4P capable Type 1 and Type 2 PDs.*<br>• Keep channel limits low and move design margins to PSE PI and PD PI P2P Unbalance parameters<br>**Con's: Group to review and find if any** |

Annex K16

# Summary - 3

- This work shows clearly (by analytical proof ) the following facts:
- **Channel P2PRUNB peaks** happen at low channel resistance when number of connectors n>0. happens also with 4 connectors not just 1 or 2.
- **Only Resistance Difference Requirement** for Channel, PSE PI and PD PI specifications (Rdiff=|Rmax-Rmin|) is mathematically and practically insufficient. To understand this fact, see Equation for pair maximum current. It can lead to PSE PI P2PRUNB=100%. See Annex L1 and L2). (Maximum voltage difference requirement is required only for PSE and PD PI but is not relevant to our discussion now).
- **R_minimum parameter for PSE PI and PD PI .** 3rd parameter must be includes in the unbalance parameters in addition to P2PRUN and voltage difference. The best mathematically and practically wise is a definition for Rmin. E.g to require the existence of minimum resistance. For mathematical justification see Annexes L1 and L2.
  - PD PI already have minimum resistance in connectors, diodes, transformers (on all pairs in 1GBT systems and up), EMI filters , PCB traces etc.). See slides 38 and 39 for numbers.
  - PSE PI already have minimum resistance in connectors, optional diodes, transformers (on all pairs in 1GBT systems and up), EMI filters , sense resistors, MOSFET resistance, PCB traces etc.) See slides 38 and 39 for numbers.
    - So no additional burden on PSE nor PD in terms of cost.
    - Can't find also any effect on exiting products on the field working at 4P
- **Statistical analysis:** We should calculate channel P2PRUB using statistics which may help to reduce peak numbers in case we are not happy with worst case analysis approach.

# Recommendations for next steps

- Channel P2P Resistance Unbalance
- Channel P2P Resistance unbalance limit shall be set to 7% maximum or 0.1Ω pair to pair difference which ever is greater.
- The 7% limit shall be tested with 0.3Ω±1% (TBD) connected to each pair or 0.15 Ω±1% (TBD) per wire.

- PSE PI unbalance parameters
- PSE PI unbalance parameters shall include:

P2PRUNB,Voltage Difference and Rmin=0.125Ω (TBD)

- PD PI unbalance parameters
- PD PI unbalance parameters shall include:

P2PRUNB,Voltage Difference and Rmin=0.175Ω (TBD)

# Questions for the group

- Why we need the 0.2Ω max definition?
  - Response1(Wayne): Per connector standards resistance difference between pins is 0.05Ω max, 4 connectors ➔ 0.2Ω max.
  - Response 2 (Yair): It make sense. However it should be divided by factor of 2 due to the fact that it is a pair of wires in parallel. It also be OK with our database that shows 4*0.02 Ω/2=0.04 Ω max with 4 connectors which is below the standard numbers. And it also make sense per slide 22 (marked also Annex K11, Channel Resistance Difference vs. C_P2PRUNB) in which all peaks are concentrated below Rdiff (pair to pair)=1Ω. See Annex P for details.

- Other inputs/response?
- No response on meeting #8.

# Q&A

# Backup slides

# Channel P2PRUNB use cases vs. Cable resistance per meter.

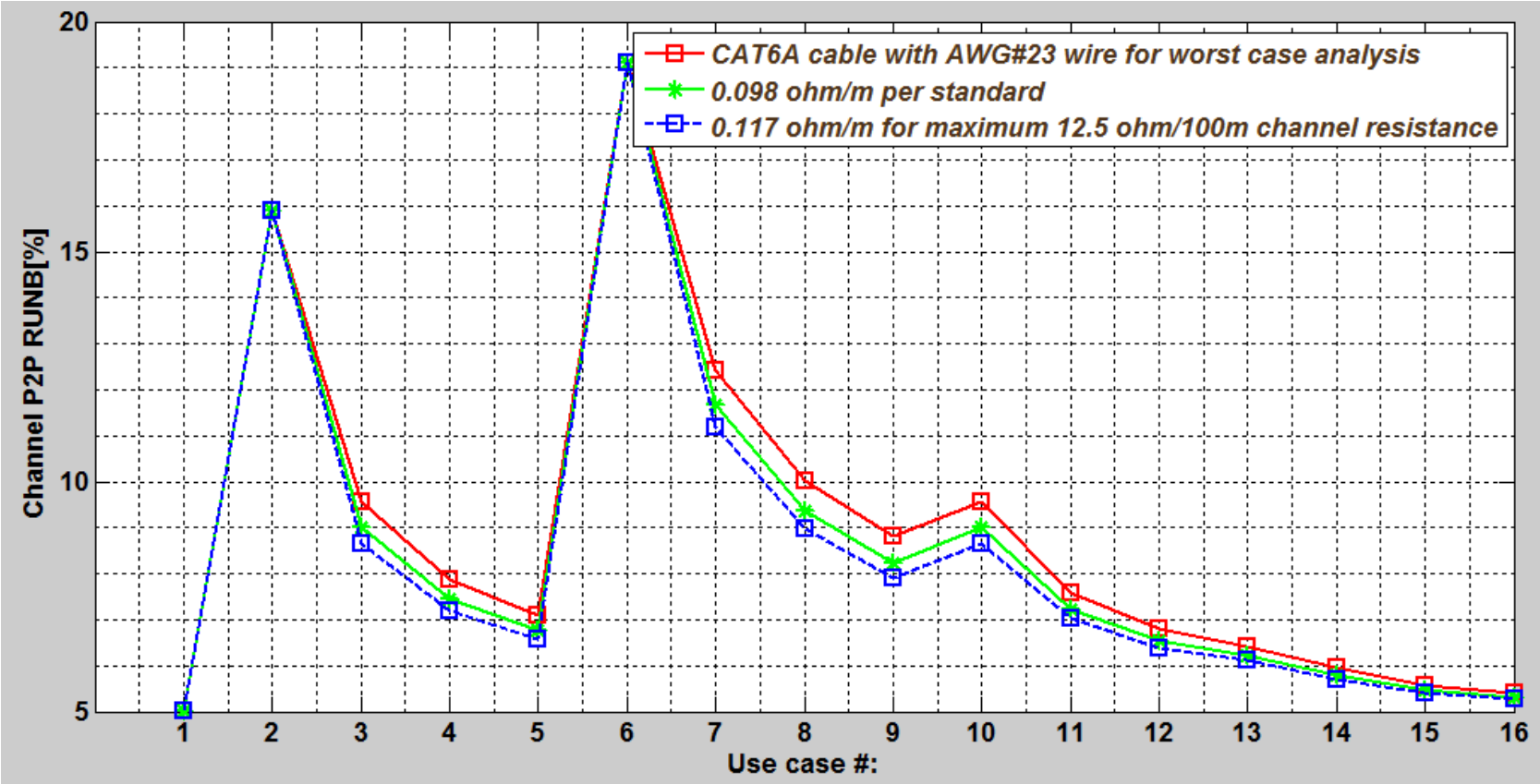


- As can be seen, CAT 6A cable with AWG#23 need to be selected for worst case analysis.
  - When we analyze the end to end Channel P2PRUNB, the 0.117Ω/m will be used too for generating maximum channel current.
- Standard value 9.8Ω/100m is maximum value which is between the two other cables. As a result, it will not be used for the purpose of this work.

# Use case analysis results with connector Rdiff=0.015Ω instead 0.02 Ω.

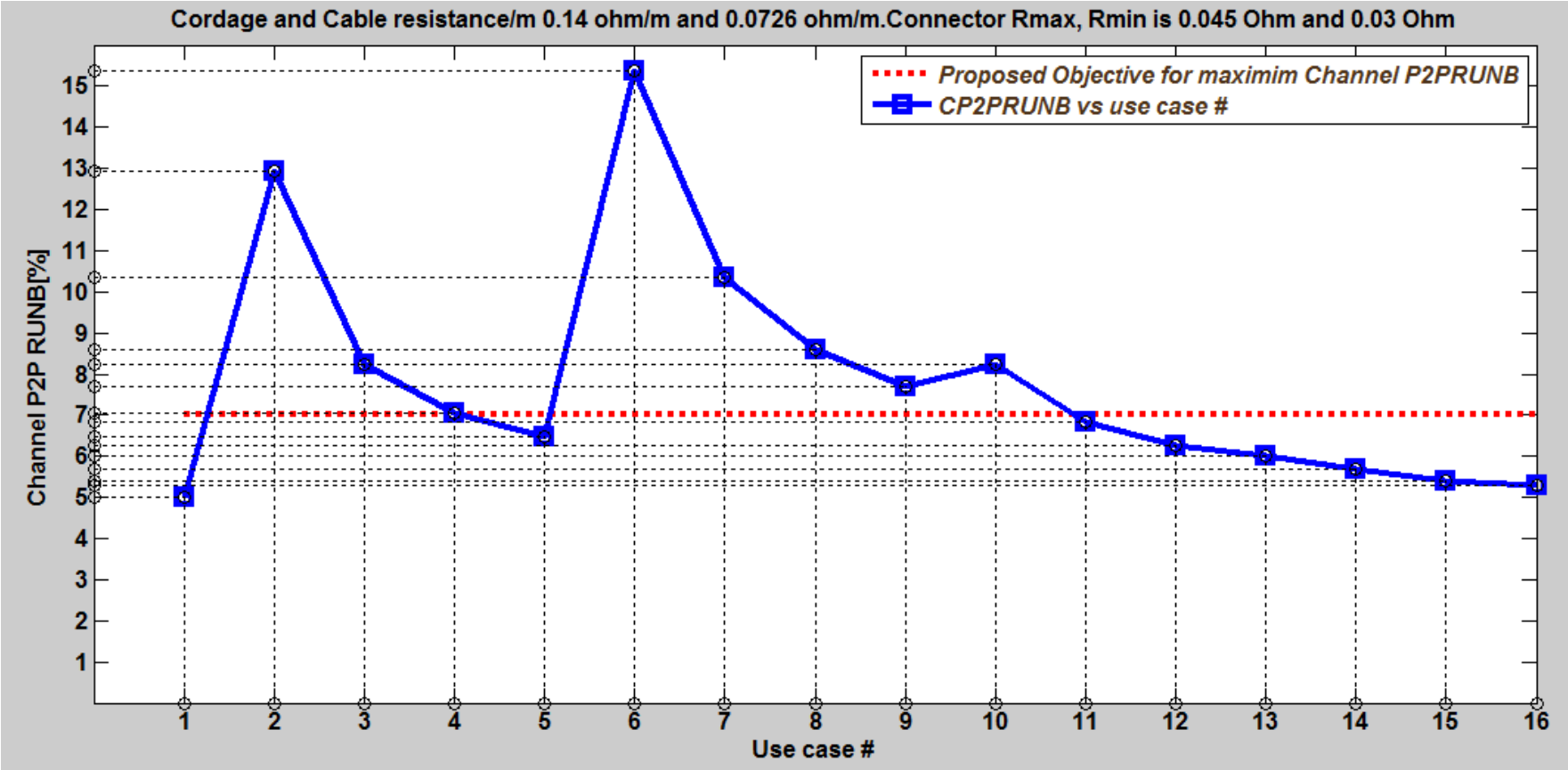


- Lower peaks received with using connector Rdiff=0.015Ω instead of 0.02 Ω compared to previous run.

| | A | | | | | | | | B | | | C | | | D | |
|---|---|---|---|---|---|---|---|---|---|---|---|---|---|---|---|---|
| | [1, | 2, | 3, | 4, | 5, | 6, | 7, | 8, | 9, | 10, | 11, | 12, | 13, | 14, | 15, | 16]; Use Case Number |
| n = | [0, | 1, | 1, | 1, | 1, | 2, | 2, | 2, | 2, | 4, | 4, | 4, | 4 | 4, | 4, | 4]; number of connectors |
| L1= | [0.15, | 0.25, | 0.5, | 0.75, | 1, | 0.25, | 0.5, | 0.75, | 1, | 2, | 4, | 6, | 8, | 8, | 9, | 10]; Cordage[m] |
| L2= | [0, | 0, | 1, | 2, | 3, | 0, | 1, | 2, | 3, | 4, | 8, | 12, | 15, | 30, | 60, | 90]; Cable[m] |

# Use case analysis results with connector Rmax=0.2Ω Rdiff=0.05Ω -1

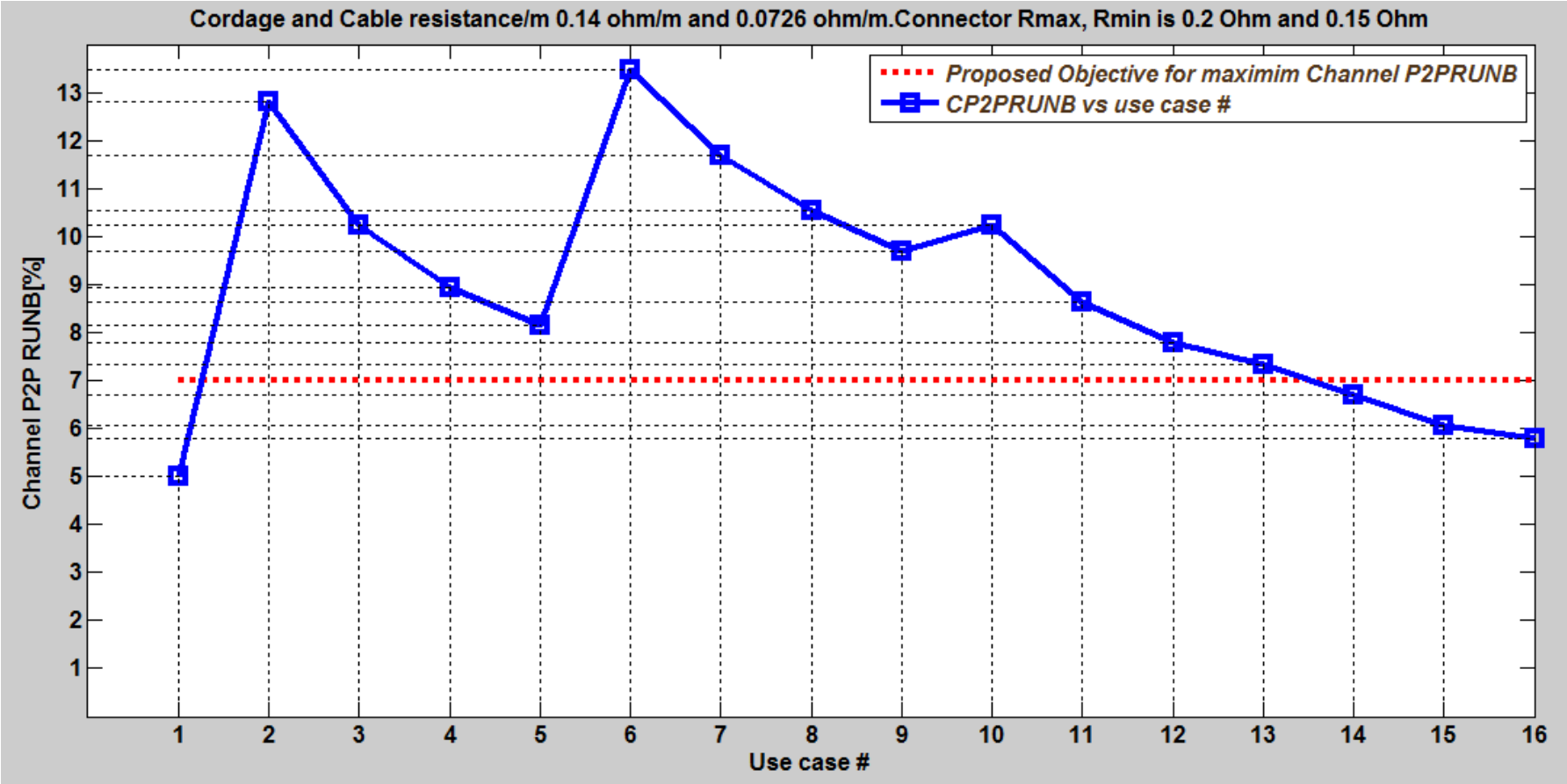


- This use case is unlikely to happen although it represent connector Rmax and Rdiff maximum values per standard.
- Peaks are lower than Rmax=0.05Ω and Rdiff=0.02Ω however it requires more cable length to meet the 7% line. This can be considered as a new worst case scenario however not realistic one per the data we have.

# Use case analysis results with connector Rmax=0.2Ω Rdiff=0.05Ω -2

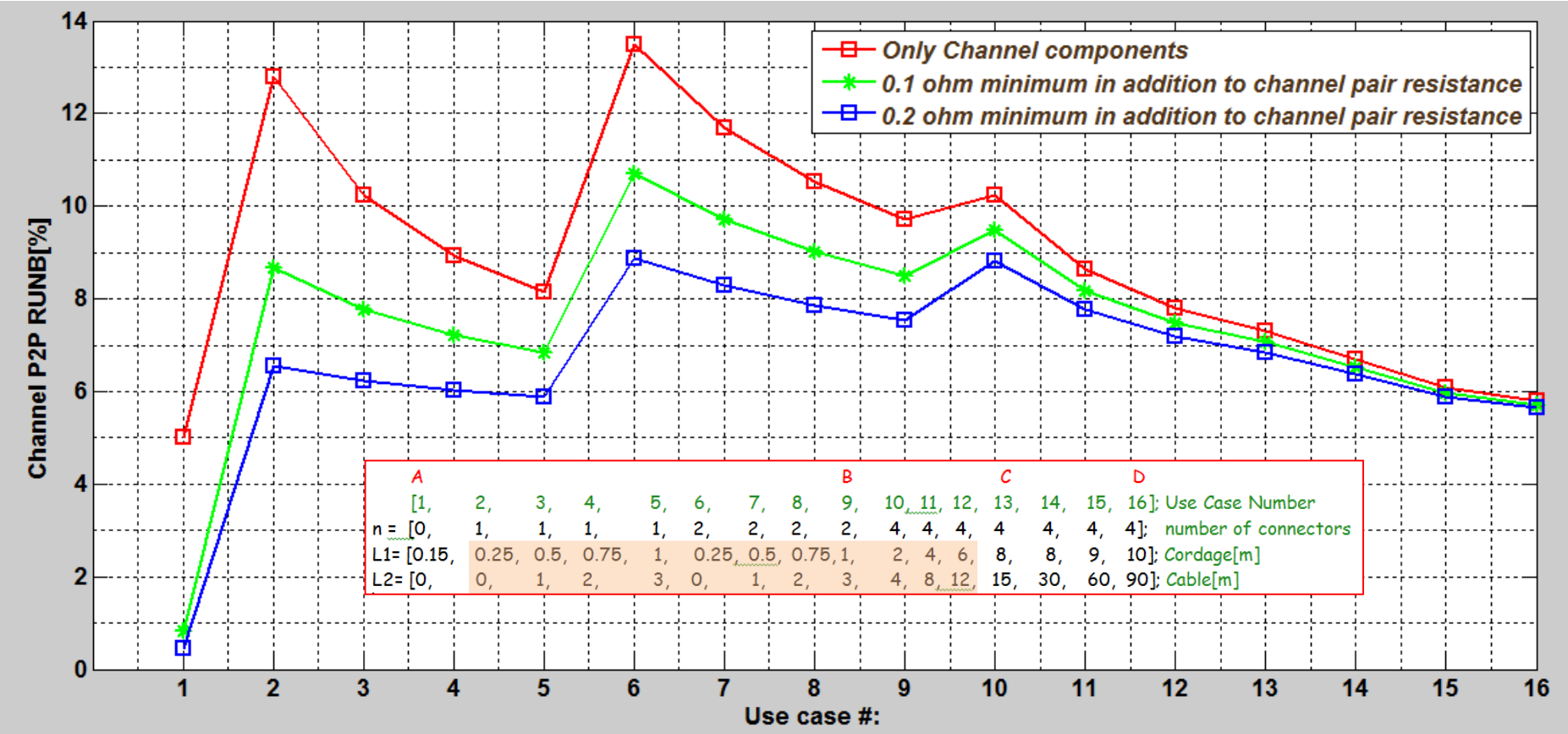


- Use case analysis results when adding external minimum resistance requirement per pair for filtering C_P2PRUNB peaks during: (a) During Channel Compliance test for C_P2PRUNB. (b) PSE and PD PI).

# Use case analysis results with connector Rmax=0.2Ω Rdiff=0.05Ω -3

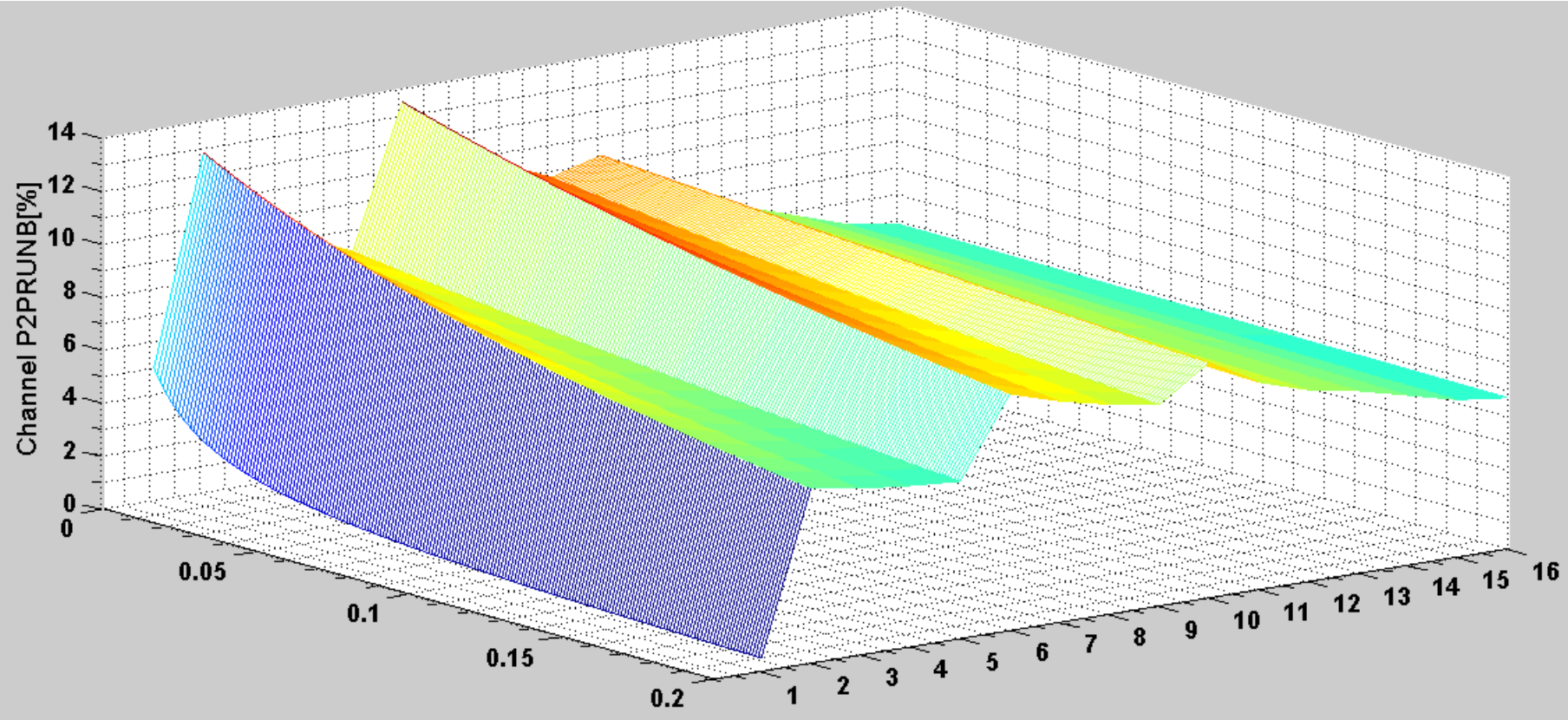


- The overall picture with adding external resistance for compliance test only.
- Testing results with connector standard numbers Rmax=0.2Ω and Rdiff=0.05Ω.
  - If the ratio between Rdiff/Rmax=25%=50/200 then it is expected that if Rmax is better i.e. 0.06Ω than Rdiff will be around 0.015Ω process wise.

# Specifying minimum resistance for PSE and PD PIs -1.

- From the analysis results, it is obvious that specifying minimum resistance requirement to PSE and PD PI is a desired objective.
  - It helps reducing P2P unbalance peaks at short cables
  - We have transformer windings that are natural resistors with good Runb ➔ also with regulating effect to connectors.
  - We have it anyway over most of our pairs. For 1000BT and up we have it on all pairs.
  - They can never be 0!.
  - They will be always >0.1Ω (TBD) or even higher.
  - This facts can be used when checking Channel P2PRUNB for compliance and also for PSE and PD PIs.
- Having saying that, do we still keep PSE and PD PIs model as implementation independent?
  - It looks like YES if we make sure that PSE and PD PI have practical cost effective minimum resistance, P2PRUNB and P2P Voltage unbalance.

# Specifying minimum resistance for PSE and PD PIs -2

- Calculating existing minimum resistance in PSE and PD PI.

All numbers calculated for a pair = two wires in parallel.

| | PSE PI minimum resistance range | | |
|---|---|---|---|
| | Max | Min | |
| Connectors | 0.015 | 0.015 | 0.03 ohm per connector divided by 2 |
| Diodes | 0.25 | 0 | If AC disconnect then higher e.g. 0.25 ohm |
| Transformers | 0.06 | 0 | For 1000BT and up, otherwise 0. transformer winding from center tap to outer leg=0.12ohm/2 |
| EMI Filters | 0.1 | 0.1 | |
| PCB traces | 0.01 | 0.01 | |
| Total | 0.435 | 0.125 | |

| | PD PI minimum resistance range | | |
|---|---|---|---|
| | Max | Min | |
| Connectors | 0.015 | 0.015 | 0.03 ohm per connector divided by 2 |
| Diodes | 0.25 | 0.05 | If active diodes are used (Mosfets) the resistance is lower (*) |
| Transformers | 0.06 | 0 | For 1000BT and up, otherwise 0. transformer winding from center tap to outer leg=0.12ohm/2 |
| EMI Filters | 0.1 | 0.1 | |
| PCB traces | 0.01 | 0.01 | |
| Total | 0.435 | 0.175 | |

Total minimimum PSE and PD resistance per pair 0.125 + 0.175 = 0.3

# Annex A

### 33.1.4.2 Type 1 and Type 2 channel requirement

Type 1 and Type 2 operation requires that the resistance unbalance shall be 3 % or less. Resistance unbalance is a measure of the difference between the two conductors of a twisted pair in the 100 Ω balanced cabling system. Resistance unbalance is defined as in Equation (33–1):

$$\left\{ \frac{(R_{max} - R_{min})}{(R_{max} + R_{min})} \times 100 \right\}_{\%} \qquad (33\text{–}1)$$

where

| | |
|---|---|
| $R_{max}$ | is the resistance of the channel conductor with the highest resistance |
| $R_{min}$ | is the resistance of the channel conductor with the lowest resistance |

- The way channel pair (the differences between two wires in a pair) resistance unbalance was defined.

Source: Yair Darshan per IEEE802.3-2012

# Annex A1

- Inputs from Pete Johnson:
- 3% DC Unbalance comes from ISO / IEC.
- **TIA 568** has DC Unbalance specified as 5% using **ASTM D 4566** definition of DC Unbalance that is <u>different</u> from that used by ISO.
- The ASTM method is % Runbal = 100 * (Max R – Min R) / Min R
- 
- Yair Response (to be discussed by the group) next (3rd meeting):
  - Since cables vendor wants to meet "all standards" they meets the 2% cable. System and component vendors count on the 3% channel.
  - Our IEEE POE standard is counting on the 3% max.
  - The ASTM method that calculates % Runbal = 100*(Max R – Min R) / Min R is familiar but has no practical physical meaning related to current unbalance that we can use e.g. for transformers. The equation that we are using is a derivation of the current unbalance definition and rationale.
  - As a result, I believe we should stay with current 3% pair resistance unbalance and our IEEE equation for Unbalance.
- Pete agrees to this response.
- Group agreed to Yair proposed response as well.

# Annex A2 - ANSI/TIA-568-C.2

- Resistance unbalance of a channel

**6.2.1 DC loop resistance**

DC loop resistance for category 3, 5e, 6, and 6A channels shall not exceed 25 Ω. Refer to TIA TSB-184 for additional information on channel resistance related to guidance on delivering power.

**6.2.2 DC resistance unbalance**

DC resistance shall be measured for all channel conductors. DC resistance unbalance shall be calculated for each pair of the channel in accordance with equation (14) and shall not exceed the greater of 3% or 200 milliohms. DC resistance unbalance is not specified for category 3 channels.

$$Resistance_Unbalance_{pair} = \left( \frac{|R_1 - R_2|}{R_1 + R_2} \right) \cdot 100\% \qquad (14)$$

where:

$R_1$ is the DC resistance of conductor 1.

$R_2$ is the DC resistance of conductor 2.

Source: Yair Darshan per ANSI/TIA-568-C.2

# Annex A2 - ANSI/TIA-568-C.2

- Connecting Hardware requirements

**6.8.1 DC resistance**

DC resistance shall be measured in accordance with ASTM D4566 at 20 ℃ ± 3 ℃ for all connecting hardware cable pairs.

> NOTE – DC resistance is a separate measurement from contact resistance as specified in Annex A. Whereas DC resistance is measured to determine the connector's ability of transmit direct current and low frequency signals, contact resistance is measured to determine the reliability and stability of individual electrical connections.

Category 3 connecting hardware DC resistance between the input and the output connections of the connecting hardware (not including the cable stub, if any) used to terminate 100 Ω twisted-pair cabling shall not exceed 0.3 Ω.

Category 5e, 6, and 6A connecting hardware DC resistance between the input and the output connections of the connecting hardware (not including the cable stub, if any) used to terminate 100 Ω twisted-pair cabling shall not exceed 0.2 Ω.

**6.8.2 DC resistance unbalance**

DC resistance unbalance shall be calculated as the maximum difference in DC resistance between any two conductors of a connector pair measured in accordance with IEC 60512, Test 2a.

Category 3 connecting hardware DC resistance unbalance should not exceed 50 mΩ. Category 5e, 6 and 6A connecting hardware DC resistance unbalance shall not exceed 50 mΩ.

Source: Yair Darshan per ANSI/TIA-568-C.2

# Annex B: What is more important P2PRUNB or Current increase/pair due to at worst case conditions?

- To discuss the advantages that PD constant Power Sink allows us. Source: Yair Darshan
- Background material for considering (P2PRUNB in this slide refer to the end to end channel P2PRUNB):
  - Worst case End to End Channel Pair to Pair Channel Resistance Unbalance is at short cable (<100m).
  - At short cables PD voltage is higher that at 100m channel length and pair/port current is lower
  - Not only that the port current is lower, it is <600mA for Type 3 systems below TBD channel length.
    - **As a result, P2PCRUNB max may not an issue (pending the P2PCRUNB value).**
  - At 100m the P2PCRUNB is much smaller than at short channel
  - Resulting with less significant contribution to Ibias due to P2PCRUNB and as a result to OCL.
  - **This approach was validated in:** http://grouper.ieee.org/groups/802/3/4PPOE/public/jul13/darshan_2_0713.pdf and requires further investigation for completing this work.

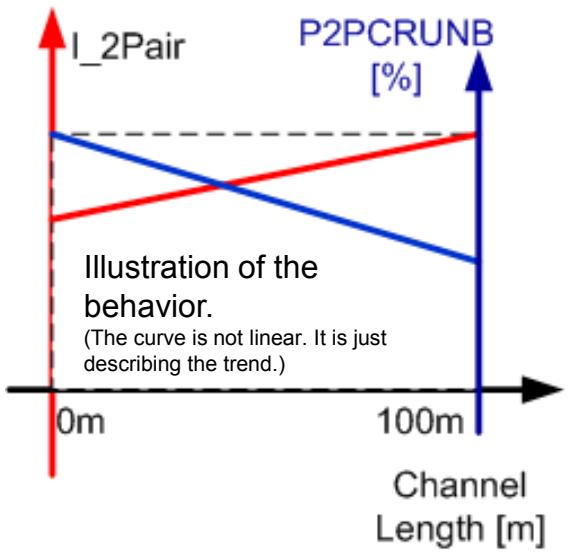


The answer is: In order to answer the question we need to check both data sets 1 and 2 in the worst case data base. We need to check the following equation:

$$0.5\cdot(1+\alpha_{(L=100m)})\cdot I_{total_100m} < or > 0.5\cdot(1+\alpha_{(L=0.15m)})\cdot I_{total_0.15m}$$

$$\alpha_{(L=100m)} = End2End_C_P2PRUN_at_100m$$

$$\alpha_{(L=0.15m)} = End2End_C_P2PRUN_at_100m$$

**Source:**
1. See link above, from July 2013.
2. Adhoc meeting #2, February 24, 2014.

# Annex C1: Why we care for P2P resistance unbalance parameters

Source: Yair Darshan

- In 4P system:

- If P2PRUNB>0 the PD current over each 2P will not be the same.
  - 51W PD with maximum total current of 1.2A, the current will split to 0.6A+0.18A=0.78A over the 2pairs with minimum resistance and 0.42A with the pair with maximum resistance.
- In general: The pair with the highest current will be: It*(1+P2PRUNB)/2
  - This will require to overdesign the magnetics for high P2PRUNB values.
  - Watching limits of connector pins, PCB traces and power components on the DC current path at PSE and PD and overdesign accordingly.
  - So there is interest to have components with lower P2PRUNB along the channel as possible by cost and manufacturability limitations to result with lower End to End Pair to Pair RUNB.

# Annex C2: Why we care for P2P resistance unbalance parameters

- Other concerns were how it will affect on PD minimum available power for a 60W system (two times the 802.3at power). The decision was that for our current data base we can supply 49W for the PD (instead of 51W). See 802.3bt objective.
  - This was done by calculating what will be the power at the PD if we keep maximum 600mA at the pair in order not to cause issues to Type 2 component/ devices that can work with 4P
- Other concern was if P2PRUNB will increase power loss on the cable. We show that now it will not. Moreover we show that if P2PRUNB increased, the power loss is decreased.

$$Trise = 0.5 \cdot N \cdot It^2 \cdot R_{loop_\max} \theta_N \cdot [1 - P2PCRUNB]$$

- See: http://www.ieee802.org/3/4PPOE/public/nov13/darshan_02_1113.pdf for more details.

Source: Yair Darshan

# Annex D1: Calculations of CP2PRUNB with constant power sink model and the effect on transformer bias current.

| Equation | Symbol | Units | Channel Length | |
|---|---|---|---|---|
| | | | 1m | 100m |
| End to End Pair to Pair Channel Resistance Unbalance: $CP2PRUNB = \frac{\sum R\max - \sum R\min}{\sum R\max + \sum R\min}$ | CP2PRUB | - | 0.26 | 0.112 |
| | I | A | 1.02 | 1.2 |
| | I/2 | A | 0.51 | 0.6 |
| I*CP2PRUNB | DI | A | 0.2652 | 0.1344 |
| I*CP2PRUNB/2 | DI/2 | A | 0.1326 | 0.0672 |
| I*(1+CP2PRUNB)/2 | Imax=(I+di)/2 | A | 0.643 | 0.667 |
| I*(1-CP2PRUNB)/2 | Imin=(I-di)/2 | A | 0.377 | 0.533 |
| Ibias=3%*Imax/2 | | A | 0.0193 | 0.02 |
| Sanity Check | I | A | 1.02 | 1.2 |
| Effect on Ibias of transformer: 3%*(Imax-0.6)/2 | d(Ibias) | mA | 0.639 | 1.008 |

Source: Yair Darshan

# Annex D2: Affecting parameters on Transformer Ibias

- PSE Rsense and Rdson are out of the loop for pair unbalance
  - They affect only on P2P unbalance
    - Which affect Iport (increase or decrease) which affect Ibias by 3%*(Iport_max-Iport_nominal)
- How to reduce Ibias?
  - Adding Rballast on transformers reduces Ibias directly
  - Defining minimum cable length reduces P2PRUNB_max. The effect on Ibias is 3%*(Iport_max-Iport_nominal).
  - Adding in PD ballast resistors (cost effective in PD and not in PSE)
    - May not be needed for PD power below TBD.
  - Using match diode bridges, significantly reduces P2PRUNB and as a result, the current unbalance

Source: Yair Darshan

# Annex E1 – Connector and Cabling standard data

- Summary of resistivity and resistance unbalance (Source Wayne Larsen)
- specifications in TIA cabling standards
- Resistivity of cable and “cordage” from cabling standards
- – Cable DC resistance is 9.38 Ohms / 100 meters, ANSI/TIA-568-C.2, 6.4.1, page 58. Cat 5e, 6, and 6A are all the same.
- – Cordage DC resistance is 14 Ohms / 100 meters, ‘568-C.2, 6.6.1,page 74. Cat 5e, 6, and 6A are all the same.
- – Cable and cordage resistance unbalance with a pair is 2.5 % per IEC 61156-1, ‘568-C.2-1 6.4.2 page 58. All categories are the same.
- – Cable and cordage resistance unbalance between pairs is not specified, but has been studied and found to be less than 5 %.
- – Connectors are allowed 200 mOhms resistance and 50 mOhms resistance unbalance between any conductor. They actually have much less resistance.
- Yair Darshan notes:
- These values are maximum values, pre PoE standard.
- There are no specifications for minimum values as needed for P2P unbalance analysis. As a result, to cover both angles of P2PRUNB at short and long channel, maximum 12.5Ω channel was used for generating maximum pair current and channel with horizontal cable resistivity of 0.066 Ω/m was used to generate worst case P2PRUNB. Later this number was updated to 0.079 Ω/m to include twist rate effect.
- As for connectors: less than 0.06 Ω connector resistance was used. See worst case data base for details.

# Annex E2 – Connectors terms.

- **Source Yakov Belopolsky / BEL**
- The term used in the connector industry is LLCR (Low Level Contact Resistance)- Bulk $R_{LLCR-B}$
- Low Level Contact Resistance (LLCR-Bulk ) consists of four components
- Plug Conductor Resistance $R_{CR}$
- Plug Blade/Conductor Contact Resistance $R_{PBCR}$
- Plug Blade/Jack Wire Contact Resistance or TRUE LLCR $R_{CRTRUE}$
- Jack Wire Resistance $R_{JWR}$
- $R_{LLCR-B} = R_{CR} + R_{PBCR} + R_{CRTRUE} + R_{JWR}$
- However, it is easy to measure and subtract $(R_{CR} + R_{PBCR})$ from the Bulk so many connector vendors use the Contact resistance $(R_{CRTRUE} + R_{JWR})$
- **A typical differential between two types measurements is less than 20 milliohm**
- The reason is that the $(R_{CRTRUE} + R_{JWR})$ is affected by environmental exposure and defines the quality of the connector design separately from the plug blade termination quality

# Annex E3: Connector data from vendors datasheet

Source: Microsemi

| | Vendor | Resistance per datasheet |
|---|---|---|
| CAT6 | A | 30 miliOhm max ,Jack only[1] |
| CAT6 | B | 35 miliOhm max ,Jack only[1] |
| CAT6 | C | 30 miliOhm max ,Jack only[1] |
| | | |

1. It is per datasheet so actual values are lower.

Source: Yair Darshan

# Annex E4 - Connector data – Source BEL

http://www.ieee802.org/3/at/public/2006/07/belopolsky_1_0706.pdf slide 22.

**30miliOhm connector resistance shown by BEL**

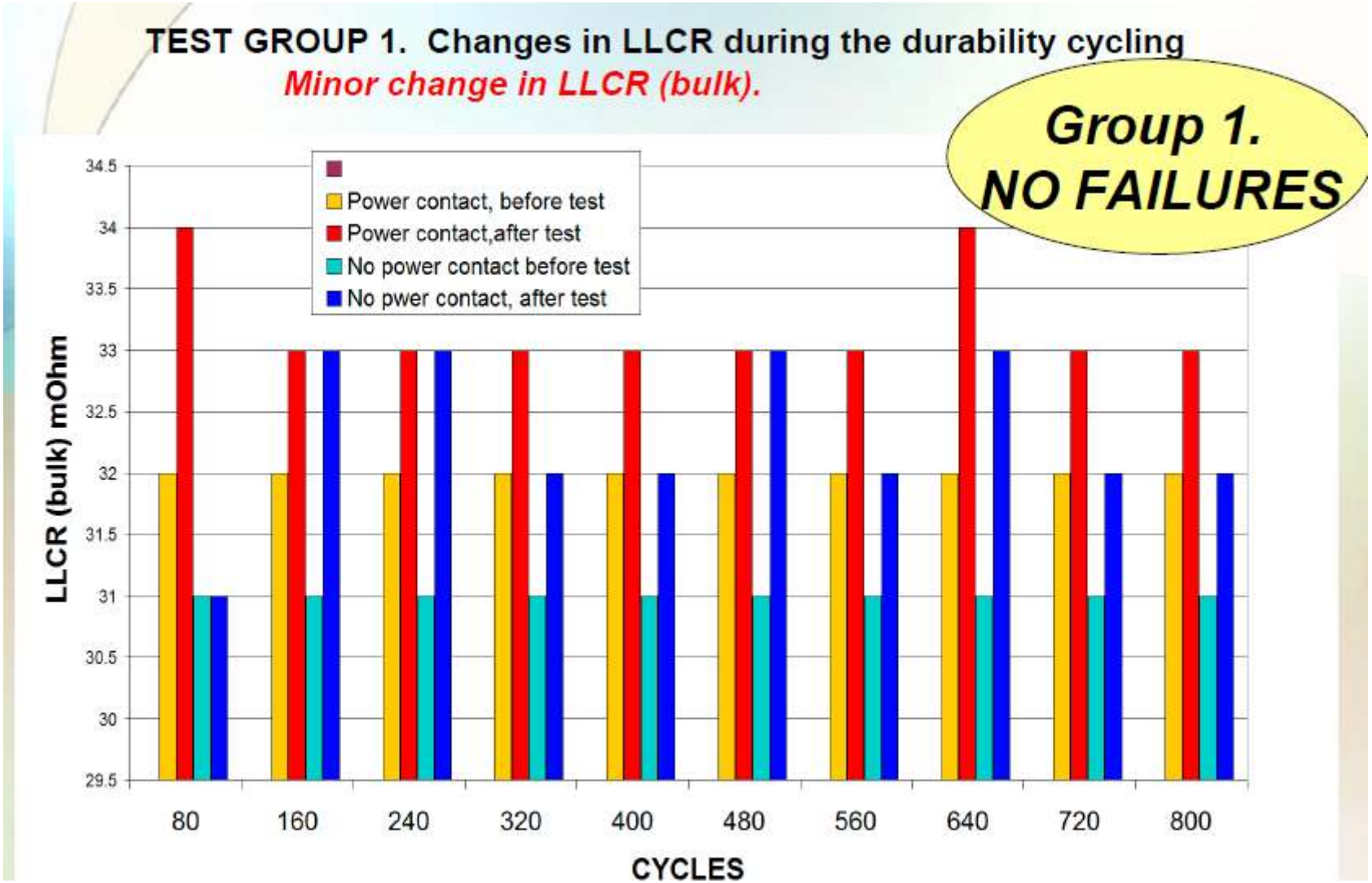

# Annex E5: Connectors test data

- Source: Microsemi
- Each number in the table is the average resistance of all pins from end to end (Plug and Jack) for each connector.

| Connector # | Vendor A | Vendor B | Vendor C | Vendor D | |
|---|---|---|---|---|---|
| | CAT6 | CAT6 | CAT6A | CAT6A | |
| 1 | 45 | 43 | 39 | 42 | 45 |
| 2 | 43 | 43 | 40 | 49 | 46 |
| 3 | 48 | 42 | 40 | 40 | 39 |
| 4 | 48 | 46 | 42 | 39 | 44 |
| 5 | 43 | 45 | 39 | 38 | 47 |
| 6 | 46 | 39 | 43 | 50 | 44 |
| 7 | 45 | 42 | 39 | 38 | 43 |
| 8 | 49 | 46 | 42 | 41 | 44 |
| 9 | 46 | 45 | 39 | 44 | 45 |
| 10 | 42 | 45 | | 51 | 44 |
| 11 | 43 | 46 | | 44 | 43 |
| 12 | 43 | 43 | | 50 | 39 |
| 13 | | 46 | | 54 | 40 |
| 14 | | 42 | | 39 | 47 |
| 15 | | 46 | | 55 | 42 |
| 16 | | 46 | | 51 | 48 |

| | |
|---|---|
| Average connector resistance | 43.50 |
| Max | 55 |
| Min | 38 |
| Rdiff | 17 |

| | Vendor A | Vendor B | Vendor C | Vendor D |
|---|---|---|---|---|
| Average | 45.08 | 44.06 | 40.33 | 44.53 |
| Max | 49 | 46 | 43 | 55 |
| min | 42 | 39 | 39 | 38 |
| Rdiff | 7 | 7 | 4 | 17 |

- **All connector resistance: 55**miliΩ max.
  - **Vendors approve 60**miliΩ max.
  - There are high quality connector that get to **30**miliΩ.
  - The average resistance of these samples: **43.5miliΩ**
- **Additional Information (not shown from the tables attached):**
- Within a connector, **pair to pair resistance difference**≤20miliΩ was confirmed.
- Most results were below 15miliΩ, therefore this number chosen to be at the worst case data base table.
- Simulations will be done for 15 and 20 miliOhms as well.

Source: Yair Darshan

# Annex E6: Connectors test data

http://www.vtiinstruments.com/Catalog/Technotes/RJ-45_Excels_For_Stria_Gage_Connection.pdf

- See above link page 12.
- 45miliOhm connector resistance of 40 connector samples.
- See page 13 at the above link for connector resistance over temperature

Source: Yair Darshan.
Based on the above link.

# Annex F – End to End P2P Resistance Unbalance Model

## General Channel Model and its components that we have used.

Adhoc: OK

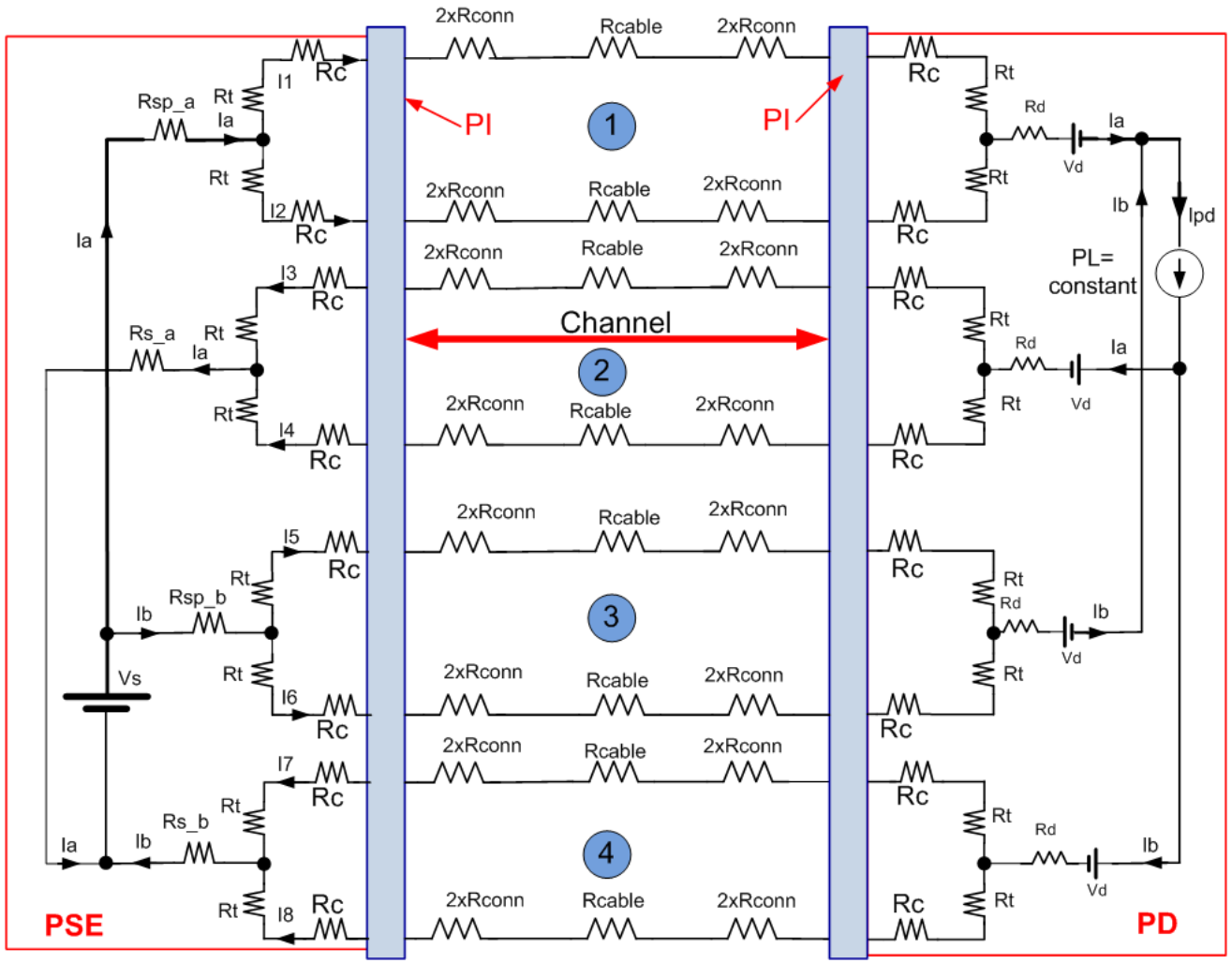


Notes for the general Model:

1. Adding resistors on positive path for general model (Rsp_a and Rsp_b). It can be set to zero or >zero pending the case being investigated.
2. Adding equipment connectors per Wayne's comment. So total end to end channel connectors is 6 max.
3. The formal channel definition is marked in red arrow.
4. Our work addresses also the internal application resistance of known components that are used
5. In simulations, the first two pairs were set to maximum and the 2nd two pairs set to minimum values. (can be also with reverse order) . See simulation results on previous meetings . **To notify group for adding this note. (June 27 ,2014)**

Source: Yair Darshan and Christian Beia

# Annex G1:Worst Case Data Base (updates) -1

See notes to the table in next slide

| # | Parameter | Data set 1 | Data set 2 |
|---|---|---|---|
| 1 | Cordage resistivity[1] | 0.14Ω/m (To check AWG#24 as well) | |
| 2 | Horizontal cable resistivity option 1[2]<br><br>option 2[3] | 11.7Ω/100m=(12.5Ω - 4*0.2Ω ) / 100m which is the maximum resistance resulting with maximum Iport. | 7.92Ω/100m (CAT6A, AWG23) This is to give us maximum P2PRunb |
| 3 | | 0.098Ω/m. | |
| 4 | Unbalance parameters | • Cable Pair resistance unbalance: 2%. Channel pair resistance unbalance: 3%<br>• Cable P2P Resistance Unbalance: 5%. Channel P2P Resistance Unbalance: 0.2Ω/6% max TBD. | |
| 5 | Channel use cases to check. See figure 1 for what is a channel. | A. 6 inch (0.15 m) of cordage, no connectors.<br>B. 4 m channel with 1 m of cordage, 3 m of cable, 2 connectors<br>C. 23 m channel with 8 m of cordage, 15 m of cable, 4 connectors<br>D. 100m channel with 10 m of cordage, 90 m of cable, 4 connectors | |
| 6 | End to End Channel[6] | The Channel per figure 1 + the PSE and PD PIs. | |
| 7 | Transformer winding resistance | 120mOhm min, 130mOhm max | |
| 8 | Connector resistance[8] | 40mOhm min, 60mOhm max | 30mOhm min, 50mOhm max |
| 9 | Diode bridge[9] | Discreet Diodes: 0.39V+0.25Ω*Id min; 0.53V+0.25Ω*id max. (TBD) | |
| 10 | PSE output resistance [10] | 0.25+0.1 Ohm min, 0.25+0.2 Ohm max | 0.1+0.05 Ohm min, 0.1+0.1 Ohm max |

Ad-hoc response, June 24, 2014. Adhoc accept this table

Source: Yair Darshan, Christian Beia, Wayne Larsen

# Annex G2: Worst case data base- Notes. -2

- 1. Per standard. See annex E1.
- 2. We need both data sets (data set 1 and data set 2) to find where is the worst condition for maximum current unbalance. See Annex B curve and data showing that at short channel we get maximum P2PRUNB but it has less concern to us since the current is lower. We need to do all use cases calculation to see where is the maximum current over the pair; at short channel or long channel. The CAT6A cable with AWG#23 has 0.066 Ω/m. Including 12% increase on cable length due to twist rate, the effective cable resistance per meter will be 1.12*6.6 Ω/100m= 0.0792 Ω/m.
- 3. Standard definition per Annex E1. We will check how results will be differ when AWG#23 is used for worst case results (lower resistance than standard definition for horizontal cable which is a maximum value.
- 6. PSE PI and PD PI includes: connector, transformer, resistors. PD PI includes diode bridge.
- 8. Connector resistance was changed since the difference (60-30) miliOhm is not representing Rdiff, it is representing maximum and minimum results of connector resistance of different connectors. To correct it, we change the numbers according to inputs from connector vendors and measured data. See Annex E1-E6 for confirmation.
- 9. Vf and Rd are worst case numbers of discrete diode which there is no control on Vf and Rd. It needs more investigation to verify that we are not over specify. (Christian is checking it). Normally match components (e.g. matched two diode bridges) are used for 4P operation. Any how ,PD PI spec. will eventually set the requirement.
- 10. PSE output resistance e.g. Rs_a/b=Rsense+Rdson in addition to winding resistance

Adhoc response, June 24, 2014. Adhoc accept this table

Source: Yair Darshan and Christian Beia

# Annex G3: Deciding on Channel components data

| Connector data combinations that don't make sense. | | | | |
|---|---|---|---|---|
| # | Rmax miliΩ | Rdif miliΩ | Rmin miliΩ | Notes |
| 1 | 201 | - | - | 200miliΩ max, standard |
| 2 | - | 51 | - | 50miliΩ max, standard |
| 3 | 60 | 50 | 10 | Meets the standard however doesn't make sense to have 71.4% P2PRUNB. |
| 4 | 61 | - | - | Field results, 60miliΩ max |
| 5 | - | 30 | - | Field results, 20miliΩ max |
| **Connector data combinations that make sense.** | | | | |
| 6 | 60 | 20 | 40 | OK |
| 7 | 50 | 20 | 30 | OK for worst case. |

- Connector vendors: connector resistance rage of different connectors for worst case lowest numbers: 0.03Ω to 0.06 Ω. (Standard is 200miliOhm max and Rdiff=50miliOhm max which is not helping us).
- With in a connector (pin to pin or pair to pair), the difference between Rmax and Rmin (=Rdiff) is 0.02Ωmax, Typically it is not more than 0.015Ω. (instead 0.03Ω).
- As a result, for worst case calculation we will use for connectors:
  - Connector Rmax=0.05Ω, Connector Rdiff=0.02Ω max.
- Cordage: 0.14 Ω/m per standard. Cable: 0.0792Ω/m for CAT6A AWG#23 cable for worst case analysis.

Adhoc response, June 24, 2014. Adhoc accept this table

Source: Yair Darshan

# Annex J1-Acronyms used in the ad-hoc activity

Adhoc: OK

- **(1) Pair resistance unbalance :** Is the resistance unbalance between two wires in the same pair as specified by IEEE802.3 and other standards. This is 2% for cable and 3% maximum for the channel. Channel is a 4 connector model (cables and connector only).

- **(2) Pair to Pair resistance unbalance**: is the resistance unbalance between two wires of the same pair connected in parallel to another two wires of other pair connected in parallel. It is 5% for a cable.

(The resistance of the two wires of the pair is know also as the common mode resistance of the pair)

- **(3) End to End channel pair to pair resistance unbalance** it is the 26.2% (TBD) worst case calculation on a worst case data base that we have generated. The 26.2% (TBD) was calculated at 20degC. The channel is including components at PSE PI and PD PI that affects the whole end to end channel.

- **(4) PSE PI Pair to Pair resistance unbalance** is the P2P DC Common Mode PSE Output Resistance Unbalance measured at the PSE PI and include PI interface circuitry such RDSON, Current sense resistor, equipment connector, magnetic winding resistance. This is included in the " end to end channel resistance unbalance" and need to be extracted from it to be separate definition for PSE PI P2PRUNB.

- (4.1) PSI PI Pair to Pair voltage difference is the P2P DC Common Mode PSE Output Voltage Difference measured at the PSE PI under TBD conditions.

Source: Yair Darshan

# Annex J2-Acronyms used in the ad-hoc activity

Adhoc: OK

- **(5) PD PI Pair to Pair resistance unbalance** is the P2P DC Common Mode PD input Resistance Unbalance measured at the PD PI and include PI interface circuitry such Diode bridge voltage offset and dynamic resistance, equipment connector, magnetic winding resistance. This is included in the "end to end channel resistance unbalance" and need to be extracted from it to be separate definition for PD PI P2PRUNB.
- **(5.1) PD PI Pair to Pair voltage difference** is the P2P DC Common Mode PD input Voltage Difference measured at the PD PI under TBD conditions.
- **(6) Channel Pair to Pair resistance unbalance** is the P2P resistance unbalance of the cables and 4 connector model. This need to be excreted from the " end to end channel resistance unbalance" and specified separately.
- So (PSE PI +Channel + PD PI)p2prunb all together is 26.2% (TBD).
- Items 4,5 and 6 will be specified in the standard, (item 2 is covered by item 6).
- Meeting #4: Adhoc response: ok. Meeting #5: To discuss changes in RED. Done.

Source: Yair Darshan

# Annex L:Same-Pair Current Unbalance vs. DC bias on Transformers

- Source: Dinh, Thuyen, Pulse.

- Current unbalance on cable pair: $\Delta I = I_1 - I_2$
- This $\Delta I$ is the net current difference between the 2 half windings of the cable side of the transformer, it only flows in one of the 2 half windings
- Since transformers are tested with bias current injected through both windings, as specified in clause 25 (sub-clause 9.1.7 of ANSI X3:263:199X), a DC bias of ($\Delta I/2$) injected into both windings will produce the same DC flux as that produced by $\Delta I$ flowing through one half winding.
- Transformers are, therefore, tested with ($\Delta I/2$) DC bias current to simulate current unbalance of $\Delta I$.

# Annex M: How we address P2PRUNB vs Temperature

- Adhoc has recommended the following approach (meetings 5,6,7)
  - How to handle PSE PI, PD PI Pair to Pair unbalance parameters and Channel P2RUNB as function of temperature?
    - <u>Adhoc response:</u>
    - Use PSE PI, PD PI pair to pair Unbalance parameters and Channel P2PRUNB that was calculated at 20°.
    - Set it as the number to meet without saying at what temperature it is.
    - Vendors will have to assure that they meet it at their operating temperature range spec.
    - How they will do it, we don't care. The rest is per 33.7.7.

**Ad-hoc response, June 10, 2014. Ad hoc agrees to set temperature of P2PUNB numbers at 20degC.**

# Annex L1: What are the options to close a specification to PSE PI and PD PI models unbalance parameters

Source: Yair Darshan. June 25, 2014

- Current unbalance will be a function of Voltage unbalance and resistance unbalance between pairs.
- At short channels were cable resistance is approaching to to the connectors and PSE_PI output resistance and PD_PI input resistance the PSE_PI resistance unbalance is dominant.
- For simplicity let's assume Voltage unbalance is zero. We will address the effect of Voltage difference later.
- By definition, PSE_PI_Iunb[%]=PSE_PI_RUNB[%]=100%*(Rmax-Rmin)/(Rmax+Rmin)
- For total PD load current "It";
- Imax_pair=It*(1+P2P_Runb[%])/2 ➔
- Imax_pair=0.5*It*[1+(Rmax-Rmin)/(Rmax+Rmin)]
- Resistance Difference=Delta Resistance=Rdiff=Rmax-Rmin. ➔
- Imax_pair=0.5*It*(1+Rdiff/(Rmax+Rmin))

Conclusions: In order to limit Imax_pair you must have in addition to voltage difference and It_max :

- Option A: Rmax, Rmin
- Option B: PSE_PI_RUNB and Rmin
- Option C: Rdiff, Rmax. Rmax>Rdiff.
- Option D: Rdiff, Rmin.
- Any other set of numbers e.g. Rdiff will not be sufficient. Why? See Annex L2

# Annex L2: Why Delta R is not sufficient to define PSE PI and PSE PI.

- Imax_pair=0.5*It*(1+Rdiff/(Rmax+Rmin))
- If only Rdiff will be used (in addition to voltage difference which is not the issue here) we will end with the following situation:
- Let's assume that the specification will be Rdiff_max=0.2Ω
- So Pair A will be 1miliOhm or 0 Ω for simplicity
- Pair B will be 0.2Ω
- The unbalance ratio will be (0.2-0)/(0.2+0)=100% unacceptable.
- Imax=(1+1)*It/2=It. Which means all/most of the current will go over 1 pair and the 2nd pair will have almost zero current.
- Moreover: Only Rdiff requirement means interoperability issues due to the fact that Rdiff=0.2Ω=(0.2-0) or =(1-0.8) or =(10-9.8). All the same Rdiff with totaly different results on the current unbalance and max current.
- In this case Rmin is essential to solve the problem.

Source: Yair Darshan. June 25, 2014

# Annex P: The value of channel maximum Rdiff

- In May 2014 we vote for the following base line text highlighting the TBD areas.

33.1.4.3 Channel Requirement for Pair to Pair Resistance unbalance

4P pair operation requires the specification of resistance unbalance between each two pairs of the channel, not greater than 200 milliOhms or 6%(TBD) which ever is greater. Resistance unbalance between the channel pairs is a measure of the difference of resistance of the common mode pairs of conductors used for power delivery. Channel pair to pair resistance unbalance is defined by …..”

The 200miliOhm above should be 0.1Ω. Why?.

Connector max Rdiff= 0.05Ω.

4 connectors is 4*0.05Ω=0.2Ω.

As a result, a pair is two connectors in parallel ➔ 0.1Ω

Connector maximum resistance is 0.2Ω and is not the Issue here. The discussion is on channel pair to pair resistance difference.

Each pin has Rdiff_max=0.05Ω, 4 connectors, ➔ 0.2Ω,

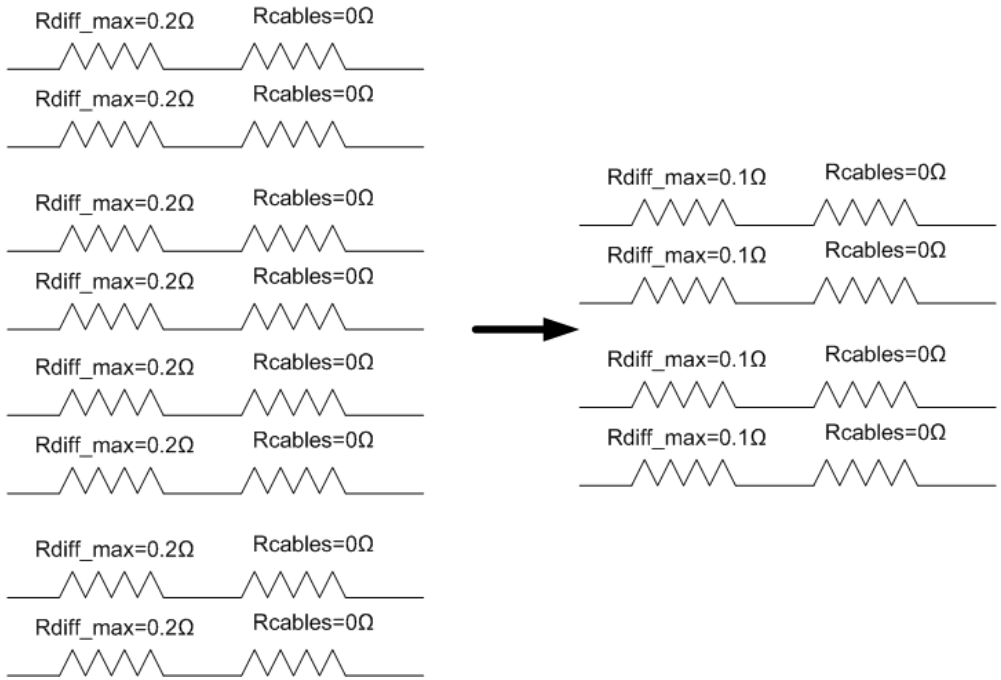


Source: Yair Darshan

# Last meetings material

# Meeting # 8 Attendees (June 24, 2014)

- Please send email after the meeting to confirm your attendance.

Larsen, Wayne / Commscope

Jeff Heath / LT

Brian Buckmeier / BEL

Sterling Vaden / charter.net

Koussalya Balasubramanian / Cisco

David Tremblay / HP

David Abramson / TI

Rimboim Pavlik / Microsemi

Yair Darshan / Microsemi

Ken Bennett / Sifos

Victor Renteria / BEL

Gaoling Zou / Maxim

Robert Wagner/ Panduit

Tobias Greulich

# Meeting # 7 Attendees (June 10, 2014)

## Meeting # 7

Jeff Heath / LT
Brian Buckmeier / BEL
David Abramson / TI
Rimboim Pavlik / Microsemi
Yair Darshan / Microsemi
Ken Bennett / Sifos
Victor Renteria / BEL
Gaoling Zou / Maxim

If you attend meeting #7 on June 10, 2014, please verify your name is recorded.

# PSE PI Model

- **PSE PI affects the End to End Channel P2P resistance unbalance and as a result, the current unbalance.**
  - It is resulted from:
    - The PSE PI pair output resistance and
    - The PSE PI pair to pair output resistance unbalance and
    - The PSE PI pair to pair output open voltage difference.

- **The objectives are:**
  - How to specify the PI unbalance parameters?
  - How to test it

- **The difficulties to resolve:**
  - PSE PI unbalance parameter as stand alone parameter, has value to our research.
    - Different resistance, P2PRUNB and voltage unbalance will result with different results
    - Limiting resistance to minimum or maximum value doesn't make sense since it limits implementations e.g more dissipative ,less dissipative interfaces, where to locate control circuitry and how many pairs current to sense and control etc.
  - The value of this parameter became apparent when connected to a channel and to a PD with specified maximum resistance unbalance and current unbalanced. .

Source: Yair Darshan.

# PSE PI model derivation–implementation independent approach -1

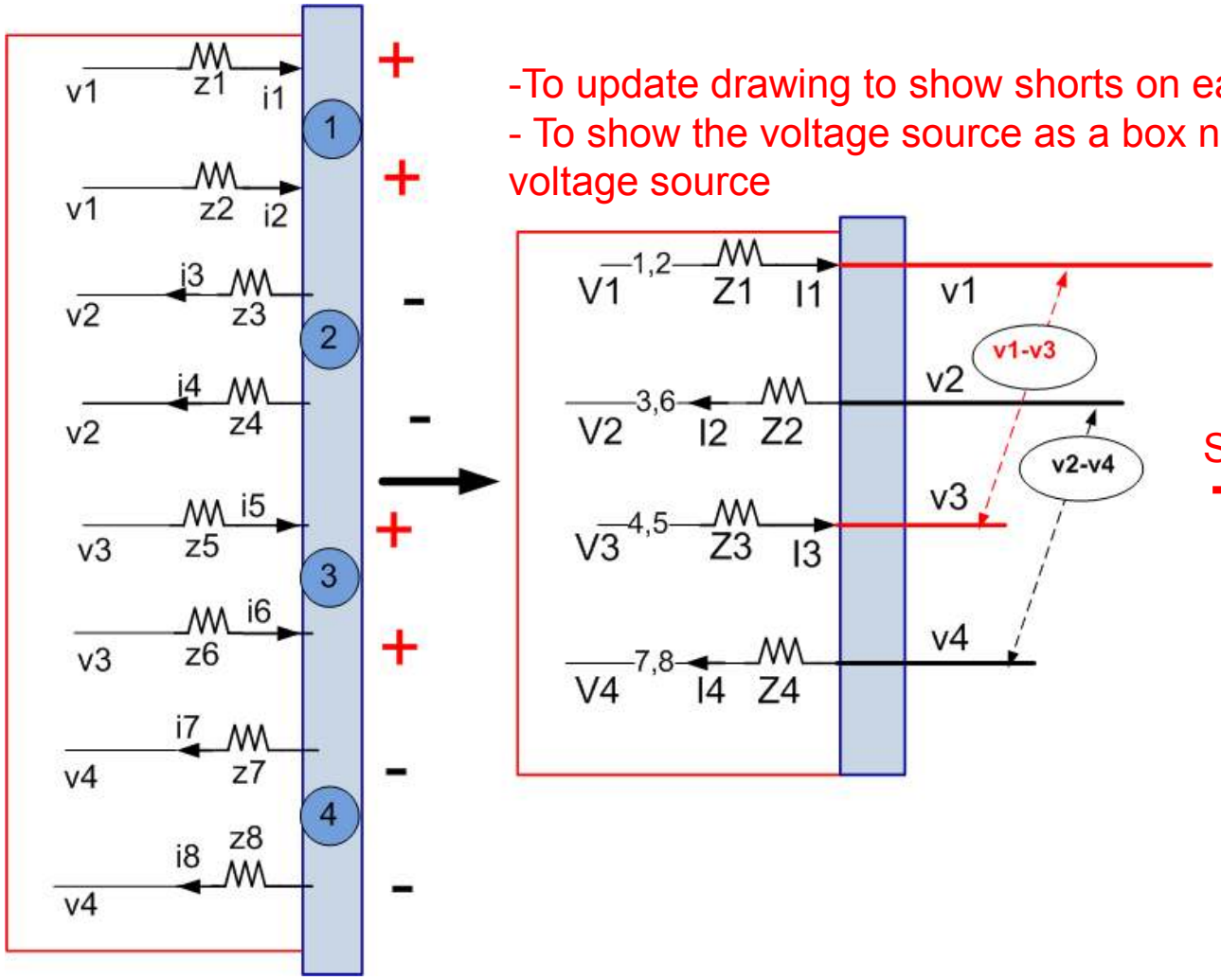


-To update drawing to show shorts on each pair output.
- To show the voltage source as a box not as a single or dual voltage source

Simplifying on next slide

Source: Yair Darshan.

# Requirement Derivation – 1 (To update drawing per previous comments)

- By definition:
- I1=(V1-v1)/Z1 ➔ Z1=(V1-v1)/I1
- I2=(V2-v2)/Z2 ➔ Z2=(V2-v2)/I2
- I3=(V3-v3)/Z3 ➔ Z3=(V3-v3)/I3
- I4=(V4-v4)/Z4 ➔ Z4=(V4-v4)/I4

- By definition:
- P2P PSE PI Zunbalance=

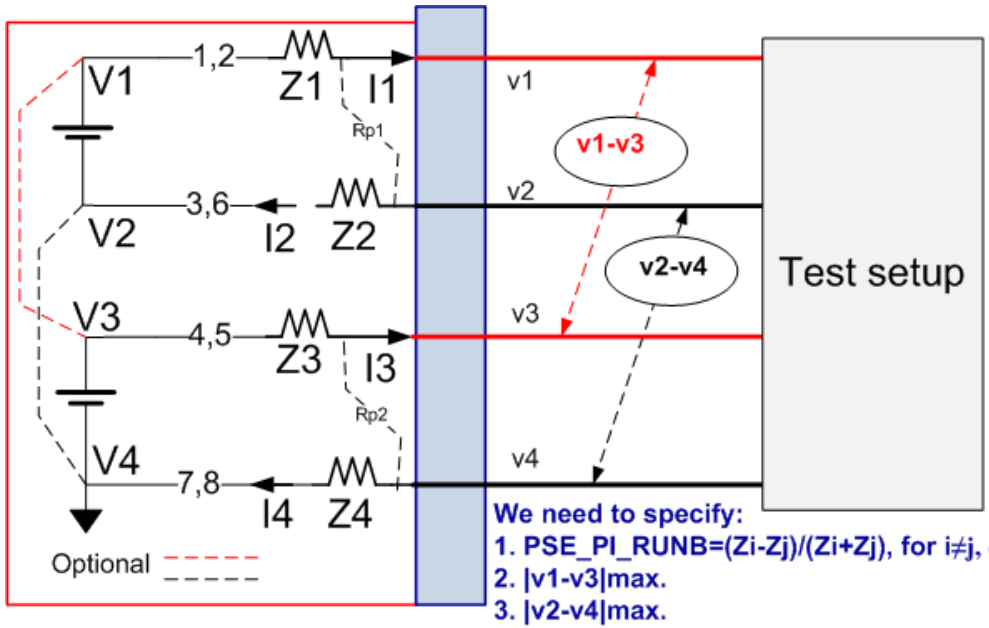


**We need to specify:**
**1. PSE_PI_RUNB=(Zi-Zj)/(Zi+Zj), for i≠j, @DC.**
**2. |v1-v3|max.**
**3. |v2-v4|max.**

In one typical application: V1=V3, V2=V4=0.
As a result, open load voltages: v1-v3➔ 0, v2-v4 ➔ 0

$$= \frac{Z_i - Z_j}{Z_i + Z_j} = \frac{\frac{V_i}{I_i} - \frac{V_j}{I_j}}{\frac{V_i}{I_i} + \frac{V_j}{I_j}} = TBD\max$$

Between any two pairs i≠j .

Source: Yair Darshan.

# Requirement Derivation – 2 (To update drawing per previous comments)

- P2P PSE PI Zunbalance=

$$= \frac{Z_i - Z_j}{Z_i + Z_j} = \frac{\frac{V_i - v}{I_i} - \frac{V_j - v}{I_j}}{\frac{V_i - v}{I_i} + \frac{V_j - v}{I_j}} = TBD \max$$

Between any two pairs i≠j.
Since we need Z in DC ➔ Z➔R

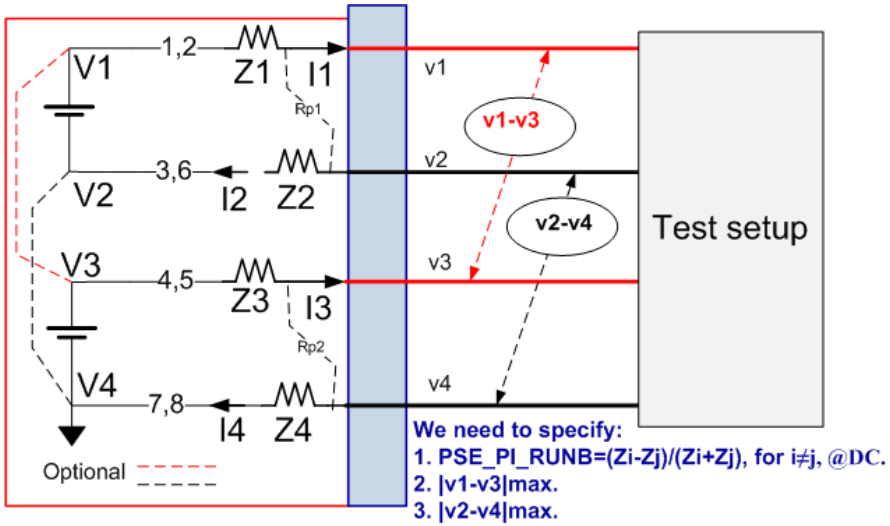


In one typical application: V1=V3, V2=V4=0.
As a result, open load voltages: v1-v3➔ 0, v2-v4 ➔ 0

$$(1)\quad \frac{Z_i - Z_j}{Z_i + Z_j} = \frac{R_i - R_j}{R_i + R_j} = P2PRUNB \max,$$

$$(2)\quad |v_1 - v_3| < TBD$$

$$(3)\quad |v_2 - v_4| < TBD$$

Ri is function of Vi/Ii which addresses non linear circuitry at worst case unbalance operating point defined by PSE vendor.

Source: Yair Darshan.

# PSE PI P2P model concept -3
# (update drawing)

Source: Yair Darshan.

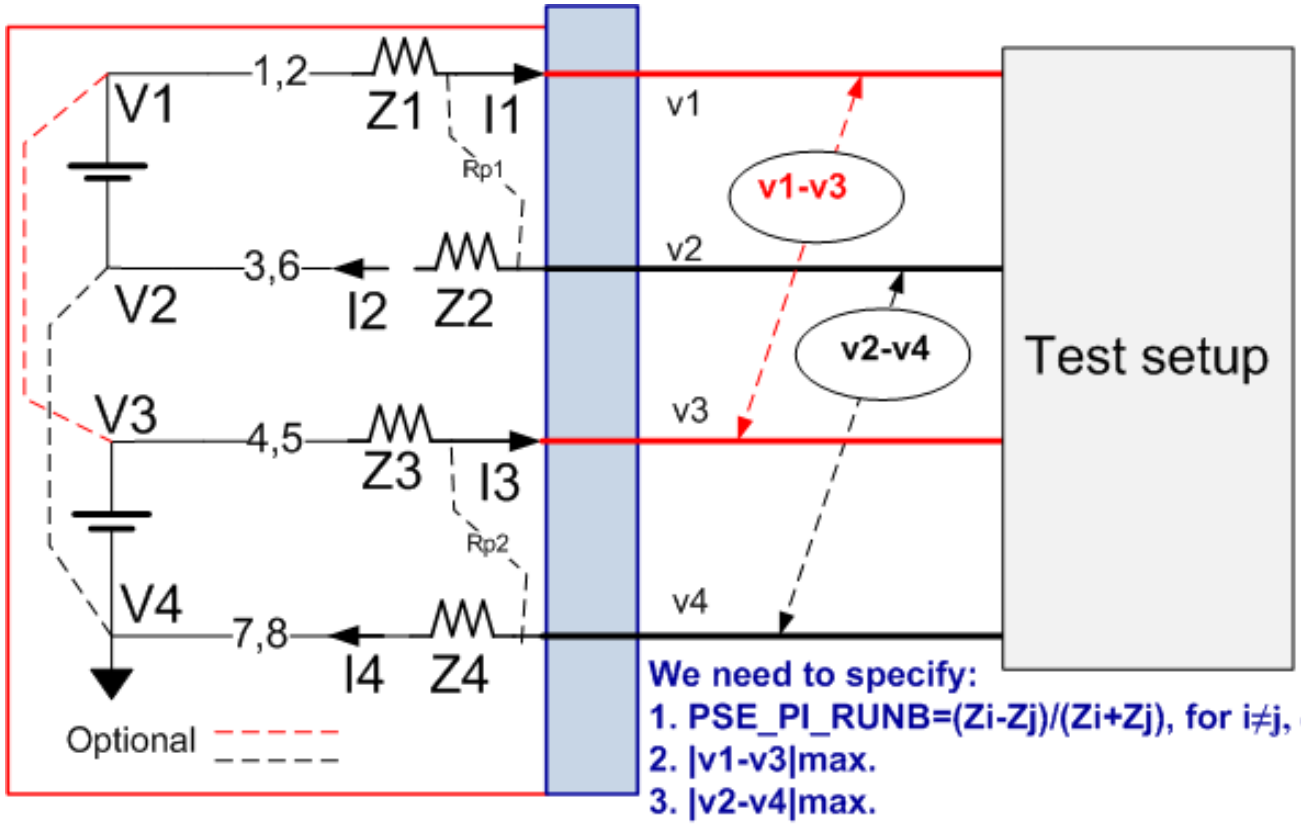


**We need to specify:**
**1. PSE_PI_RUNB=(Zi-Zj)/(Zi+Zj), for i≠j, @DC.**
**2. |v1-v3|max.**
**3. |v2-v4|max.**

In one typical application: V1=V3, V2=V4=0.
As a result, open load voltages: v1-v3➔ 0, v2-v4 ➔ 0

- In the test setup, it is possible to find P2PRUNB by measuring currents at PSE normal powering state. But this is test setup implementation issue and not part of the specification. The spec defines Voltage and Resistance to maintain implementation independent specifications.

# PSE PI P2P model concept -4 (To Update)

- Part A:
- Specifying PSE P2P_R_UNB and PSE_P2P Voltage Difference
  - PSE P2P Voltage difference at no load condition.
    - Voltage difference between the two positive voltage rails
    - Voltage difference between the two negative voltage rails
  - P2P_R_UNB, will be single number, maximum number.

- Part B:
- Defining test model and test conditions.

- Ad hoc response: TBD

Source: Yair Darshan.

# PSE PI P2P model concept -5 (To update how to test it)

- Proposed base line text:
- **33.1.4.xx Type 3 and Type 4 PSE PI Requirement for Pair to Pair unbalance**
- 4P pair operation requires the specification of resistance unbalance between each two pairs of the PSE PI, not greater than TBD milliOhms or TBD% which ever is greater. The resistance unbalance requirements between each two pairs of the PSE PI shall be met for a maximum voltage difference TBDmVdc between the two positive pairs and between the two negative pairs. The Resistance unbalance between the PSE PI pairs is a measure of the difference of resistance of the common mode pairs of conductors used for power delivery. See figure TBD for PSE PI model. PSE PI pair to pair resistance unbalance is defined by equation 33-1.XX:

- **Insert Equation here that ties Resistance and voltage unbalance together or other description TBD.**
- Equation TBD 33-1.xxx

Where:

Rpse_max is the sum of PSE PI pair elements with highest common mode resistance.

Rpse_min is the sum of PSE PI pair elements with lowest common mode resistance

Common mode resistance is the resistance of the elements over each PSE PI wires in the PI pair connected in parallel.

Source: Yair Darshan.

# PD PI P2P model concept

- TBD
- Looking for volunteers to do it.

# Meeting # 6 Attendees (Thursday May 15, 2014)

- Gaoling Zou / Maxim
- Christian BEIA / ST
- David Tremblay / HP
- Yair Darshan / Microsemi
- George Zimmerman/ CME Consulting, Affiliations: Commscope & Aquantia
- Peter Johnson / Sifos
- Rick Frosch / Phihong
- Yan Zhuang / Huawei
- Larsen, Wayne / Commscope
- Jeff Heath / LT
- Dave Dwelley / LT
- Fred Schindler / Seen Simply
- David Abramson / TI
- Rimboim Pavlik / Microsemi
- Victor Renteria / BEL
- Dave Dwelley / LT
- Heat Stuart / LT
- Sterling Vaden /
- Fred Dawson / duPont
- Shahar Feldman / Microsemi
- Wendt, Matthias / Philips
- Picard Jean / TI
- Lennart Yseboodt / Philips

# Adhoc report May 15, 2014 Norfolk VA.

- 18 attendees
- Topics discussed:
  - How to handle PSE PI, PD PI Pair to Pair unbalance parameters and Channel P2RUNB as function of temperature?
    - Adhoc response:
    - Use PSE PI, PD PI pair to pair Unbalance parameters and Channel P2PRUNB that was calculated at 20°C (or pick a number at other temperature).
    - Set it as the number to meet without saying at what temperature it is.
    - Vendors will have to assure that they meet it at their operating temperature range spec.
    - How they will do it, we don't care. The rest is per 33.7.7.
  - Two motions to specify Channel P2PRUNB and its base line text
    - Adhoc proposed the following two motions:
- Motion #1:
  - Move that 802.3bt specify the Channel Pair to Pair resistance unbalance for operating 4P systems

## Motion #2. Motion to add the following text to clause 33 after 33.1.4.2.

- **33.1.4.3 Type 3 and Type 4 Channel Requirement for Pair to Pair Resistance unbalance**
- 4P pair operation requires the specification of resistance unbalance between each two pairs of the channel, not greater than 200 milliOhms or 6%(TBD) which ever is greater. Resistance unbalance between the channel pairs is a measure of the difference of resistance of the common mode pairs of conductors used for power delivery. Channel pair to pair resistance unbalance is defined by equation 33-1.1:
- $$\left\{\frac{\left(R_{ch_\max} - R_{ch_\min}\right)}{\left(R_{ch_\max} + R_{ch_\min}\right)} \times 100\right\}_{\%} \qquad 33\text{-}1.1$$

Where:

Rch_max is the sum of channel pair elements with highest common mode resistance.

Rch_min is the sum of channel pair elements with lowest common mode resistance

Common mode resistance is the resistance of the two wires in a pair (including connectors), connected in parallel.

# Open issues - 1

- Proposal for motion for specifying PSE PI Pair to Pair Output resistance unbalance and pair to pair output voltage unbalance during Power ON state for operating 4P systems.
  - Waiting for completion of test model.
  - Test model was presented see Annex E, inputs were received:
    - To consider changing voltage source load with current load

- What is the PD load current on Mode A and Mode B in which below that current, P2P requirements can be ignored.
  - Responses:

    (1) Below 25W no need for P2PRUNB requirements

    (2) We may care below 25W to optimize transformers for 4W loads

    (3) *Response (2) checked, negligible difference between Type 1 and 2, probably no incentive for special magnetics for below Type 1 power. See annex D shown in previous meeting.*

Source: Yair Darshan.

# Open issues - 2

- Worst case Data Base
  - Comments:
    - Replace connector contact resistor with Connector resistance.
    - Yair to send Jeff connector test results.
    - To check results with connector resistance per standard with Rcmax=200miliOhm and 50miliOhms difference.
      - Response: No value. We are looking for worse case.
    - Connector resistance: 10miliom minimum – 60miliohm max.
      - Sterling to supply information for connector resistivity.
  - To check CAT6A cable resistance per the actual cable length
    - Cabling spec requires CAT6A resistance for 100m will be as defined for CAT5/e. In reality it will be lower for AWG23. To verify.
  - Diode bridges are worst case components compared to no diode or active diode bridge.
  - Clarify title of the two column use cases

# Open issues - 3

- Test models for PD and baseline text:
  - Not started yet.

---

# Adhoc meeting May 15, 2014, Norfolk VA

- Agenda
- Concept of how to address P2P unbalance as function of temperature (20 minutes)
- Discussing proposed motions from the adhoc (30 minutes)
- The PD power limits in which P2P requirements are not relevant.
- New Presentations? (10 minutes)

# Adhoc report -1

- 5 adhoc meetings since March 2014 meeting
- 15 attendees in average each meeting
- See adhoc recommendations for:
  - How to handle temperature: See slide 19.
  - Discussion and straw poll slides 14-18.
- Agreement on which parameters need to be defined in the standard (PSE PI, PD PI and Channel P2P unbalance related parameters: Slide 8. Discussion slides 7-8.
- Agreement on terms and acronyms to be used in adhoc discussions: slides 7-8
- Motions drafts are ready for:
  - Channel P2P Resistance Unbalance are ready: Slides 10 and 11
  - PSE PI P2PRUNB and PSE P2P Voltage Difference: Slide 12
- Agreement on 4 channel length scenario to be calculate worst-case: Slide 24-25
  - Need to specify conditions for compliance based on cabling performance suggested by Wayne. Need farther discussion (9.38 ohms and 14 ohms data on slide 25)

# Adhoc report -2

- Worst Case data base was updated (2,4,6 connectors, different channel lengths: Slide 27.
  - Simulation results: Slide 28-31.
  - Conclusions: Slide 32 to be discussed.

- Motions need to be closed soon
  - PD PI P2P unbalance requirements
  - In which temperature we will calculate spec P2P unbalance parameters? See slide 21

- Open issues
  - What is the PD power/current that below it, P2P requirements are not important?
    - Good discussions. Yair & Christian (and Ken?) will work on proposal.
- More relevant material and discussions on the rest of the slides

# Meeting # 5 Attendees (Thursday May 8, 2014)

- Ronald Tellas / Panduit
- Gaoling Zou / Maxim
- Brian Buckmeier / BEL
- Christian BEIA / ST
- Steinke, Stephan / Molex
- Koussalya Balasubramanian / Cisco
- David Tremblay / HP
- Yair Darshan / Microsemi
- George Zimmerman/ CME Consulting,
  Affiliations: Commscope & Aquantia
- Ken Bennett / Sifos
- Rick Frosch / Phihong
- Yan Zhuang / Huawei

# Meeting # 3 and # 4 Attendees (April 24, May 1, 2014)

## Meeting # 3

- Yan Zhuang / Huawei
- Ronald Tellas / Panduit
- Larsen, Wayne / Commscope
- Jeff Heath / LT
- Brian Buckmeier / BEL
- Rick Frosch / Phihong
- Christian BEIA / ST
- Leonard Stencel / Bourns
- Fred Schindler / Seen Simply
- Koussalya Balasubramanian / Cisco
- David Tremblay / HP
- David Abramson / TI
- Rimboim Pavlik / Microsemi
- Yair Darshan / Microsemi
- Ken Bennett / Sifos
- Victor Renteria / BEL
- George Zimmerman/ CME Consulting, Affiliations: Commscope & Aquantia

## Meeting # 4

- Steinke, Stephan / Molex
- Gaoling Zou / Maxim
- Jean Picard / TI
- Larsen, Wayne / Commscope
- Jeff Heath / LT
- Brian Buckmeier / BEL
- Christian BEIA / ST
- Koussalya Balasubramanian / Cisco
- David Abramson / TI
- Yair Darshan / Microsemi
- Ken Bennett / Sifos
- Wendt, Matthias / Philips

# Proposed Agenda, Meeting #4, May 1, 2014.

- Introduction

- Planes for today, May 8, 2014
  - Introduction (1 minute)
  - Approving slide 6 and 7 updates (5 minutes)
  - Finalizing Motion 1 and/or 1.1. (10 minutes)
  - Approving slide 19 proposal (temperature issue) (10 minutes)
  - Christian Presentation – Data results from updated data base model (10m)
  - Discussion on other proposed motions. (10 minutes)

  - Discuss proposed baseline text (Moved to IEEE meeting next week)

# Introduction

- The purpose of this ad-hoc is to recommend the Task-Force for what is needed to specify the channel pair to pair resistance unbalance while considering not only the formal channel components (Cable and Connector) but also the Power Interface (PI) components at both ends of the 4P PoE system.

- Patent Policy

-Please read the Patent Policy slides at http://www.ieee802.org/3/patent.html prior the meeting.

# Acronyms used in the ad-hoc activity (1)

Adhoc: OK

- **(1) Pair resistance unbalance :** Is the resistance unbalance between two wires in the same pair as specified by IEEE802.3 and other standards. This is 2% for cable and 3% maximum for the channel. Channel is a 4 connector model (cables and connector only).

- **(2) Pair to Pair resistance unbalance**: is the resistance unbalance between two wires of the same pair connected in parallel to another two wires of other pair connected in parallel. It is 5% for a cable.

(The resistance of the two wires of the pair is known also as the common mode resistance of the pair)

- **(3) End to End channel pair to pair resistance unbalance** it is the 26.2% (TBD) worst case calculation on a worst case data base that we have generated. The 26.2% (TBD) was calculated at 20degC. The channel is including components at PSE PI and PD PI that affects the whole end to end channel.

- **(4) PSE PI Pair to Pair resistance unbalance** is the P2P DC Common Mode PSE Output Resistance Unbalance measured at the PSE PI and include PI interface circuitry such RDSON, Current sense resistor, equipment connector, magnetic winding resistance. This is included in the " end to end channel resistance unbalance" and need to be extracted from it to be separate definition for PSE PI P2PRUNB.

- (4.1) PSI PI Pair to Pair voltage difference is the P2P DC Common Mode PSE Output Voltage Difference measured at the PSE PI under TBD conditions.

# Acronyms used in the ad-hoc activity (2)

Adhoc: OK

- **(5) PD PI Pair to Pair resistance unbalance** is the P2P DC Common Mode PD input Resistance Unbalance measured at the PD PI and include PI interface circuitry such Diode bridge voltage offset and dynamic resistance, equipment connector, magnetic winding resistance. This is included in the "end to end channel resistance unbalance" and need to be extracted from it to be separate definition for PD PI P2PRUNB.
- **(5.1) PD PI Pair to Pair voltage difference** is the P2P DC Common Mode PD input Voltage Difference measured at the PD PI under TBD conditions.
- **(6) Channel Pair to Pair resistance unbalance** is the P2P resistance unbalance of the cables and 4 connector model. This need to be excreted from the " end to end channel resistance unbalance" and specified separately.
- So (PSE PI +Channel + PD PI)p2prunb all together is 26.2% (TBD).
- Items 4,5 and 6 will be specified in the standard, (item 2 is covered by item 6).
- Meeting #4: Adhoc response: ok. Meeting #5: To discuss changes in RED. Done.

# Proposal text for Motion (1) (From meeting #4). See next slides: Breaking to separate motions

- Move that 802.3bt specify the following parameters for operating 4P systems during Power ON state:

a) PSE PI Pair to Pair resistance unbalance and pair to pair voltage unbalance. (Adhoc-done)

(The model is the same, two voltage sources V1, V2 or single voltage source in the model is implementation issue. What we care is the voltage difference measured at the PI (max|V1-V2|). (Group response: ??)

b1) Specify test circuit/procedure for specifying PD PI Pair to Pair resistance unbalance (For this motion, a2 on separate motion after doing some work).

b2) PD PI Pair to Pair resistance unbalance and voltage unbalance.

***(For next meeting to present PD test circuit for PD PI P2PRUNB)***

c) Channel Pair to Pair resistance unbalance (Adhoc-done)

The above parameters will be analyzed and specified based on the End to End Channel Pair to Pair Resistance Unbalance model as proposed by the ad-hoc. See slide N, link..

A.I.: Jeff, Jean and interested parties for closing item b. Please prepare presentation with your comments and Suggested remedies to be discuss over the reflector and we help with our inputs.

# Proposal text for Motion (1)

Adhoc: OK

- Motion to require that the 802.3bt Task force will specify the requirements for Channel Pair to Pair resistance unbalance for operating 4P systems.
- Meeting #5:Adhoc-done.

- (Better language suggested by George, send during the meeting)
- Move that 802.3bt specify the Channel Pair to Pair resistance unbalance for operating 4P systems
- Adhoc ok: 15/5/2014

# Proposal text for Motion (1.1) (ad-hoc. Move Yair, 2nd :Christian )

Adhoc: OK 15/4/2014

Motion to add the following text to clause 33 after 33.1.4.2.

- **33.1.4.3 Type 3 and Type 4 Channel Requirement for Pair to Pair Resistance unbalance**
- 4P pair operation requires the specification of resistance unbalance between each two pairs of the channel, not greater than 200 milliOhms or 6%(TBD) which ever is greater. Resistance unbalance between the channel pairs is a measure of the difference of resistance of the common mode pairs of conductors used for power delivery. Channel pair to pair resistance unbalance is defined by equation 33-1.1:
- 33-1.1

$$\left\{ \frac{\left(R_{ch_\max} - R_{ch_\min}\right)}{\left(R_{ch_\max} + R_{ch_\min}\right)} \times 100 \right\}_{\%}$$

- Where
- Rch_max is the sum of channel pair elements with highest common mode resistance.
- Rch_min is the sum of channel pair elements with lowest common mode resistance
- Common mode resistance is the resistance of the two wires in a pair (including connectors), connected in parallel.

# Proposal text for Motion (2)

- Move that 802.3bt specify PSE PI Pair to Pair Output resistance unbalance and pair to pair output voltage unbalance during Power ON state for operating 4P systems.

---

The above was item a in meeting #4.

Adhoc-done

---

(The model is the same, two voltage sources V1, V2 or single voltage source in the model is implementation issue. What we care is the voltage difference measured at the PI (max|V1-V2|). (Group response: ??)

The above parameters will be analyzed and specified based on the End to End Channel Pair to Pair Resistance Unbalance model as proposed by the ad-hoc. See slide N, link..

A.I.: Jeff, Jean and interested parties for closing item b. Please prepare presentation with your comments and Suggested remedies to be discuss over the reflector and we help with our inputs.

# Proposal text for Motion (4)

Motion to add the following text to informative section.

**Cable Requirement for Pair to Pair Resistance unbalance**

4 pair operation, requires the additional specification of resistance unbalance between each two pairs of the cable. The cable pair to pair resistance unbalance was studied and found to be 5% or less. Resistance unbalance between the pairs is a measure of the difference of resistance of the common mode pairs of conductors used for power delivery. Cable pair to pair resistance unbalance is defined by equation 33-1.1:

$$\left\{ \frac{\left(R_{cm_\max} - R_{cm_\min}\right)}{\left(_{cm_\max} + R_{cm_\min}\right)} \times 100 \right\}_{\%} \qquad 33\text{-}1.1$$

where

*Rcm*_max is the pair with highest common mode resistance.

*Rcm*_min is the pair with lowest common mode resistance.

Common mode resistance is the resistance of the two wires in a pair, connected in parallel.

# Issues to be discussed in #3/4 meeting 24/April/ May 1, 2014 (1)

- How to address temperature effect on P2PCRUNB?
  - We agree that we don't care of high temperature since it works for us (high temperature higher resistance lower P2PCRUNB)
  - So the question is narrowed to below room temperature (20-24°C)?.

Yair response:

1. All parameters in the standard are tested for compliance at room temperature.

System and component vendors are responsible to design the parts/system to meet their spec over their spec of operating temperature range.

1.1 We can study and supply the guidelines/equations in informative annex to help decide what to do in temperatures below room temperature but it can't be part of the standard. (not high priority)

<u>Please see what IEEE802.3-2012 says about this topic:</u>

**33.7.7 Temperature and humidity**

The PD and PSE powered cabling link segment is expected to operate over a reasonable range of environmental conditions related to temperature, humidity, and physical handling. Specific requirements and values for these parameters are beyond the scope of this standard.

Recommendation: To focus on results at room temperature for the baseline.

Anything else could be:

a) left for the informative section of the standard

b) per 33.7.7

Source: Yair Darshan.

# Issues to be discussed in #3/4 meeting 24/April/ May 1, 2014 (2)

Please see what IEEE802.3-2012 says about this topic:

**33.7.7 Temperature and humidity**

The PD and PSE powered cabling link segment is expected to operate over a reasonable range of environmental conditions related to temperature, humidity, and physical handling. Specific requirements and values for these parameters are beyond the scope of this standard.

---

Yair's Recommendation: To focus on results at room temperature for the baseline.

Anything else could be:

a) left for the informative section of the standard

b) per 33.7.7

--- DISCUSSION ----------

(1) Yair: Define at 25degC and the rest put in the informative section

(2) Jeff/Wayne: Mandatory section we need to define at 25degC and (–TBD)

(3) Jeff: To define one number which is the worst case and will include low temperature (similar to a worst case of insertion loss at high temp.)

Yair: (May 1, 2014) During reflector discussion we saw that insertion loss is define at 20degC and at higher temperature derating is allowed by using shorter cable which means that insertion loss is not specified for worst case operating temperature (ANSI/TIA 568-C.2 Annex G Clause 6.4.7.

-Christian: Testing cost issues in (2)

–Ad hoc agree to vote by mail and result will be our recommendation to task force to move forward.

Straw poll material was sent. See details next slides.

# Options for CP2PRUNB vs Operating temperature

Source: Yair Darshan.

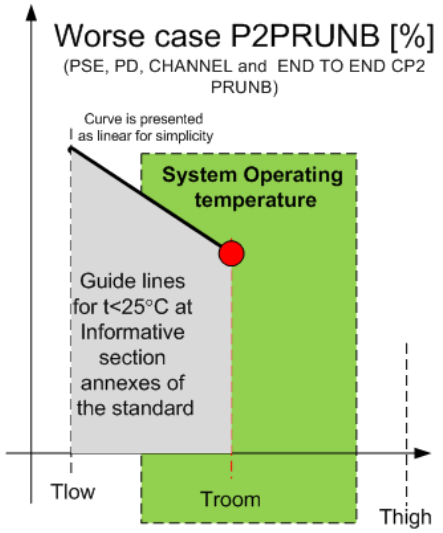


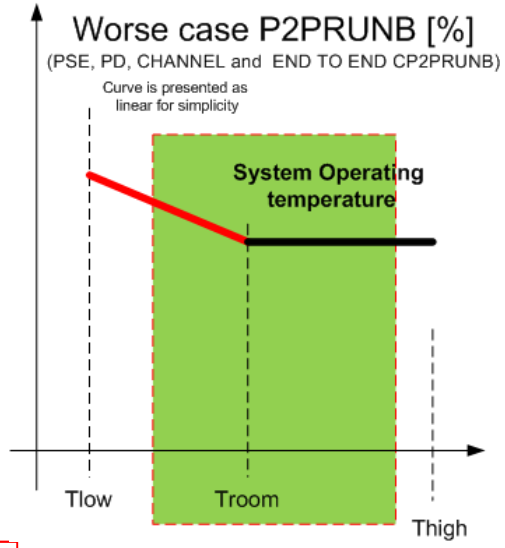


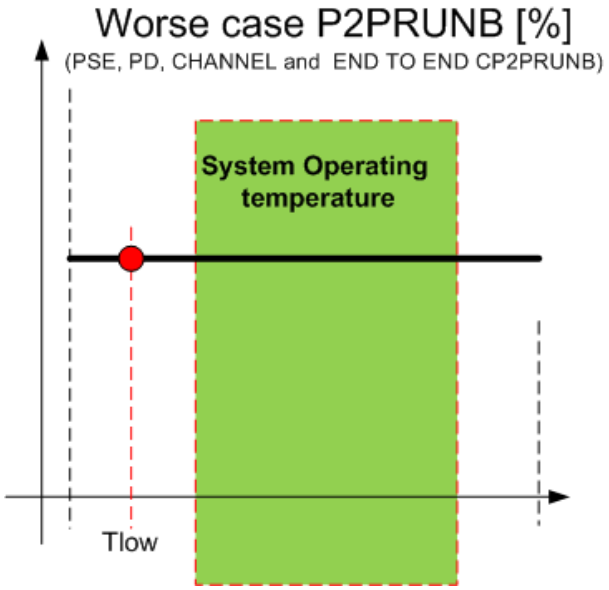


- Option1
- Defining single point at e.g. Troom=20°C and:
- (a) add information for T<Troom at the informative section **and/or**
- **(b)** follow Clause 33.7.7
- No Over Design since system vendor responsible to design their system to meet requirements.
- It may increase interoperability concerns???. This concern is valid in all options whenever there is no single worst case number that covers Tlow of 100% of use cases.
  - The remedy for it is specify the requirement and it is up to box designer to meet it over its operating temperature range.

- Option 2
- Defining curve from Tlow to Troom
- Tlow need to cover most of applications known to us.
- Prevents over design. (Allow system vendor to design for its operating temperature range)
- Tlow need to be investigated
- See interoperability concerns discussion in option 1

- Option 3
- Defining single point at Tlow which will be single worst case point.
- Tlow need to cover most of the applications min. temperature.
- This option may be overdesign for equipment with T>Tlow. (To investigate)
- Equipment that need to work at T<Tlow shall follow Clause 33.7.7
- See interoperability concerns discussion in option 1

# Straw Poll Results

Adhoc: OK

- Select one option only.
- If possible, add rational for your selection, any concerns etc., new suggestions in the notes column.

| | Options | | | Notes |
|---|---|---|---|---|
| Name | 1 | 2 | 3 | |
| Yair Darshan / Microsemi | x | | | Without having the informative part and using clause 33.7.7 instead (Option 1b or name it option 4) |
| Fred Schindler / Seen Simply | | | x | |
| Ken Bennett / Sifos | x | | | |
| Yseboodt, Lennart / Philips | x | | | |
| Jeff Heat / LT | | | | Accept suggested proposal for option 4 (see mail) which is option 1b (to ask for email confirmation). |
| Wendt, Matthias / Philips | x | | | |
| Dave Dwelley / LT | x | | | |
| Rimboim Pavlik / MSCC | x | | | |
| Christian Beia / ST | x | | | Without having the informative part and using clause 33.7.7 instead (Option 1b or name it option 4) |
| Belopolsky Yakov / BEL | x | | | |
| Gaoling Zou / Maxim | x | | | |

Note: **Option 4** language from reflector email exchange (short summary): "use the P2PRUNB for PSE, PD and Channel number that was calculated (total sum=26.2%(TBD)) at room temperature (or pick number at other temperature), set it as THE number to meet without saying at what temperature it is, and vendors will have to assure that they meet it at their operating temperature range spec. How they will do it, we don't care." The rest is per 33.7.7. This option is covered by 1b.

# Issues to be discussed in #3/4 meeting 24/April/ May 1, 2014 (3)

- Results of the straw poll
- 9 for option 1 (7 for 1a or 1b, 2 for 1b)
- 1 for option 3
- 1 for 1b ?? (waiting for confirmation)

- Additional information:
- Base on reflector discussion it is summarized to:
- Use the P2PRUNB for PSE, PD and Channel number that was calculating (total sum=26.2%) at room temperature (or pick number at other temperature), set it as THE number to meet without saying at what temperature it is, and vendors will have to assure that they meet it at their operating temperature range spec. How they will do it, we don't care." The rest is per 33.7.7.
- This summary is covered by options 1b and 3.

  (Option 1 says room temperature or other temperature
- Option 3 says lower temperature than room temperature)

# Ad-hoc proposal for the Task force

Adhoc: OK

- <u>To follow the following proposed concept:</u>
- Use PSE PI, PD PI and Channel UNB parameters that was calculated 20°C (or pick a number at other temperature).
- Set it as the number to meet without saying at what temperature it is.
- Vendors will have to assure that they meet it at their operating temperature range spec.
- How they will do it, we don't care. The rest is per 33.7.7.
- Add accepts this proposal. May 15, 2014, Norfolk VA.

- Note: Channel P2PUNB is not affected by temperature is fixed

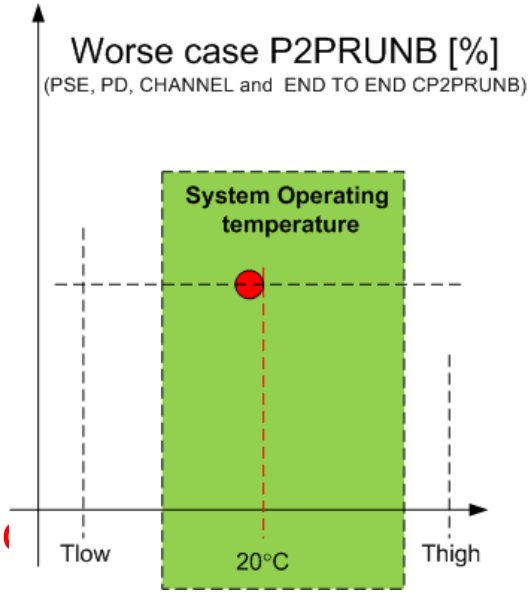


- Ad-hoc response: Agree.
- Next question will be, OK, what is that temperature p

# Next question will be, OK, what is that temperature point?

- Questions
  - Is it correct to assume that for Environment A all system parts (Switch, PSE , PD cablings etc.) are at near room temperature?
  - If bad ventilation it will be going up?
  - Is there situations that for Environment A temperature will be near zero degC? Or stay around 20°C and above?

- Proposals
  - A) T= 20°C
  - B) T= 0°C
  - C) The Typical minimum temperature at enterprise environment, Environment A or equivalent
  - Ad-hoc response:
  - Yair: It looks that the answer is not important. If we specify a number. The PSE vendor and PD vendor will have to meet it for the entire system op temperature.

# Issues to be discussed in #3 meeting April 24, 2014

- We need to define the PD load current on Mode A and Mode B in which below that current, P2P requirements can be ignored.
  - Example: if Mode A requires 350mA and Mode B require 113mA than P2P discussion is not relevant to this case.
- We agree that wee need to investigate it and address it.
  - Dave Dwelley made a comment about this issue which I didn't record.
  - Dave please send us your comment about this topic to be recorded and addressed.
  - No response. Removing this item from the agenda.
- **Proposals:**

(1) For PD total power below 25.5 Watts (that ensures pair current <600mA/pair), for any pair, meeting Channel Pair to Pair Resistance Unbalance is not required.

Yair: I agree with it. It helps for low cost PDs.

Adhoc response:

(2) For PD total power below TBD Watts that ensures pair current <600mA/pair, for any pair, meeting Channel Pair to Pair Resistance Unbalance is not required.

- (To discuss this face to face at May meeting.)
- What is the TBD number ? Next question.

## What is the PD power/current where P2P requirements for a given P2P limit numbers are not changing system/components performance as it was not important for Type 2 systems?

- To be discuss during face to face meeting at Norfolk VA.
- Analytical results showing:
  - It_max=1.2A - P2PCRUNB*It. (The decision break point of Type 3 systems)
  - If It>Itmax, CP2PRUNB requirements shall be met for Type 3 and up systems.
  - If It<Itmax for Type 3 system, CP2PRUNB requirements are not required to be met.
- It_max s total PD current over all 4 pairs that is the P2PRUNB requirements are not affecting 4P operation similar to that it is not affecting 2P operation.

- Example: It_max=1.2A-0.262*1.2A=0.885A.
- 4P PD with a power level that requires maximum 0.885A total on all 4 pairs, doesn't need to be concern by P2P requirements. To work with adhoc if this is true statement.

# Issues to be discussed in #3 meeting April 24, 2014

- (1) What is the minimum resistance in the channel that above it, we don't care? In other words, what is the minimum resistance in the PD that makes the diodes, connectors, transformers less important in the total channel P2PRUNB?
- (2) Do we need to specify minimum length?.

  Yair Response: we will know the answer based on (1) and running simulations/calculations per Wayne proposal for 4 channel length options.
- What will be minimum Ω/m for patch cords?
- Yair: I suggest to use the 9.38Ω/100m (93.8mΩ/m as max value and 5% less as the minimum value since patch cords normally need to be flexible than the horizontal cable so their wire diameter is smaller that horizontal cables such as CAT6A.
- Yair: I remember that Wayne said that the 0.15m channel length option is with 14 Ω/100m.

  -Wayne to confirm.

  -Wayne: What is your opinion to the above proposal?
- **Wayne response: See next slide.**

Source: Yair Darshan.

# Issues to be discussed in #3 meeting April 24, 2014

- **Wayne response:** Thinking about possible use cases, it seems to me it is possible, someone may provide PSE equipment in a rack and PD equipment in the rack unit below it in the same rack. If we agree this is a possible use case, it could be connected by a patch cord 0.15 m long. Patch cords have a de-rated DC resistance requirement of 14Ω/100m, as Yair states. In finding the absolute minimum, someone could also use un-de-rated patch cord material.
- In any case, for this use case, I think the DC resistance, and the DC resistance unbalance, of the cabling system, is low enough that the equipment MDI, and other elements of the equipment circuit, will dominate.
- Yair response: Yes, in very short channel the equipment MDI, and other elements of the equipment circuit, will dominate i.e. it will be almost similar to the PSE PI and PD PI P2PRUNB that we agree that we need to define anyway. I will simulate results with 0.15m cable with 0.14 Ω/m when simulation only PSE and PD PIs.
- Group OK. 0.15m minimum. Follow Wayne proposal for 4 different channel length for calculation/analysis.

Adhoc: OK

# Issues to be discussed in #3 meeting April 24, 2014

- See inputs from Pete Johnson and Yair Darshan response regarding the method of calculating Runb at Annex A1. (If you disagree send email and we will discuss in next meeting. Other wise we agree to this response)
- Adhoc agrees (no responses, removed from the agenda).
- ----
- In IEEE802.3 March 2014 meeting , Jeff Heat had a comment for the PD model. Jeff to send the details of it to the ad-hoc if you want us to discuss it. (Jeff to send data and Dave response to next meeting).
- No response. Removing this item from the agenda.

---

- See new data for P2PCRUN with out limiting the current to 600mA /pair with 6 connectors (See Christian presentation)

- See previous data presented again on Annex C on issues reminding us why we are working on P2P issues and what was the concerns that we had to addressed.

# Updated Worst Case Data Base

Adhoc: OK

| Table 1 | CAT5E Cable resistivity | CAT6/A Cable resistivity |
|---|---|---|
| Cable resistivity | 117mOhm/m | 66mOhm/m |
| Transformer winding resistance | 120mOhm min, 130mOhm max | 120mOhm min, 130mOhm max |
| 2-connector Contact resistance | 15mOhm min, 30mOhm max | 15mOhm min, 30mOhm max |
| 4-connector Contact resistance | 30mOhm min, 60mOhm max | 30mOhm min, 60mOhm max |
| 6-connector Contact resistance* | 45mOhm min, 90mOhm max | 45mOhm min, 90mOhm max |
| Diode bridge | 0.39V+0.25Ohm*Id min; 0.53V+0.25Ohm*id max | 0.39V+0.25Ohm*Id min; 0.53V+0.25Ohm*id max |
| PSE output resistance (e.g. Rs_a/b=Rsense+Rdson) | 0.25+0.1 Ohm min 0.25+0.2 Ohm max | 0.1+0.05 Ohm min 0.1+0.1 Ohm max |

- Source: Christian presentation on May, 8 2014 adhoc meeting.
- Diode model was changed
- **Replace connector contact resistor with Connector resistance. May 15, 2014**
- To supply Yair tests for connector tests
- To check what will be with 50miliom max difference. So it could be 10miliom minimum – 60miliohm max.
- Sterling to supply information for connector resistivity.
- To check CAT6A cable resistance per the actual cable length
- Change titels of the two columns

# CAT6/A, 2-connector model

| Length [m] | PD power [W] | Pair with min current [mA] | Pair with max current [mA] | Idiff [mA] | P2PCRunb [%] |
|---|---|---|---|---|---|
| 0.15 | 51 | 713.09 | 333.59 | 379.51 | **36.26%** |
| 1 | 51 | 703.75 | 343.54 | 360.21 | **34.39%** |
| 10 | 51 | 647.97 | 405.83 | 242.14 | **22.98%** |
| 100 | 51 | 612.77 | 516.87 | 95.89 | **8.49%** |
| | | | | | |
| 0.15 | 75 | 975.35 | 571.98 | 403.37 | **26.07%** |
| 1 | 75 | 966.43 | 582.25 | 384.18 | **24.81%** |
| 10 | 75 | 915.09 | 648.09 | 267.00 | **17.08%** |
| 100 | 75 | 937.66 | 810.77 | 126.89 | **7.26%** |

- Source: Christian presentation on May, 8 2014 adhoc meeting.

# CAT6/A, 6-connector model

| Length [m] | PD power [W] | Pair with min current [mA] | Pair with max current [mA] | Idiff [mA] | P2PCRunb [%] |
|---|---|---|---|---|---|
| 0.15 | 51 | 711.42 | 337.09 | 374.33 | **35.70%** |
| 1 | 51 | 703.83 | 345.29 | 358.54 | **34.17%** |
| 10 | 51 | 654.98 | 400.77 | 254.21 | **24.08%** |
| 100 | 51 | 617.65 | 514.68 | 102.96 | **9.09%** |
| | | | | | |
| 0.15 | 75 | 987.44 | 564.02 | 423.42 | **27.29%** |
| 1 | 75 | 979.68 | 573.15 | 406.53 | **26.18%** |
| 10 | 75 | 931.34 | 636.24 | 295.10 | **18.83%** |
| 100 | 75 | 947.13 | 808.59 | 138.54 | **7.89%** |

- Source: Christian presentation on May, 8 2014 adhoc meeting.

# CAT5E, 2-connector model

| Length [m] | PD power [W] | Pair with min current [mA] | Pair with max current [mA] | Idiff [mA] | P2PCRunb [%] |
|---|---|---|---|---|---|
| 0.15 | 51 | 713.08 | 336.22 | 376.86 | **35.91%** |
| 1 | 51 | 697.53 | 352.86 | 344.67 | **32.81%** |
| 10 | 51 | 628.90 | 433.31 | 195.58 | **18.41%** |
| 100 | 51 | 653.74 | 568.96 | 84.78 | **6.93%** |
| | | | | | |
| 0.15 | 75 | 977.02 | 576.14 | 400.88 | **25.81%** |
| 1 | 75 | 962.23 | 593.34 | 368.89 | **23.71%** |
| 10 | 75 | 901.66 | 680.49 | 221.17 | **13.98%** |
| 100 | 75 | 1087.30 | 961.05 | 126.25 | **6.16%** |

- Source: Christian presentation on May, 8 2014 adhoc meeting.

# CAT5E, 6-connector model

| Length [m] | PD power [W] | Pair with min current [mA] | Pair with max current [mA] | Idiff [mA] | P2PCRunb [%] |
|---|---|---|---|---|---|
| 0.15 | 51 | 711.75 | 339.41 | 372.33 | **35.42%** |
| 1 | 51 | 698.99 | 353.28 | 345.72 | **32.85%** |
| 10 | 51 | 636.67 | 427.56 | 209.10 | **19.65%** |
| 100 | 51 | 658.14 | 568.37 | 89.77 | **7.32%** |
| | | | | | |
| 0.15 | 75 | 989.47 | 567.90 | 421.57 | **27.07%** |
| 1 | 75 | 976.47 | 583.37 | 393.10 | **25.20%** |
| 10 | 75 | 917.08 | 669.74 | 247.35 | **15.59%** |
| 100 | 75 | 1099.57 | 964.24 | 135.33 | **6.56%** |

- Source: Christian presentation on May, 8 2014 adhoc meeting.

# Conclusions

- Worst case condition for P2PCRunb is:
  - Single 0.15m CAT6A cable between PSE and PD (2-connector model)
- The max P2PCRunb is 36.26%, i.e. 380mA over 1.05A
- Increasing the number of connector has a ballasting effect, decreasing P2PCRunb.
  - 4-connector results are in the middle between 2 and 4 connector models
- ----------
- With CAT6/A cabling it is possible to deliver 75W to the PD without exceeding 1A per pair (for any cable length and # of connectors)
- A 100m CAT5E cable in a 6-connectors environment would require up to 1.1A to deliver 75W to the PD
- Yair comment: This part is not final conclusions since it is worst case analysis. We need to check if with statistical analysis were lower P2P numbers are obtained, we can work with CAT5e as well and getting 75W at the load. There is benefit to use CAT5e as well for Type 4.

# Comparison between 4 connectors and 6 connectors Model. -6

## Simulation Results

- Results for Table 1 right column data number set (minimum resistivity cable Type).
- Pair was not limited to 0.6A
- Numbers were taken from the pairs with highest and lowest values.
- The model used is per Drawing #1

| Simulation Results of worst-case analysis **with 4 connectors** | | | | |
|---|---|---|---|---|
| Length[m] | Pair with minimum current [mA] | Pair with maximum current [mA] | Idiff=Max-Min [mA] | P2PCRunb [%] |
| 0.15m | | | | |
| 1 | 385 | 659 | 275 | 26.30 |
| 10 | 415 | 636 | 221 | 21.04 |
| 100 | 500 | 626 | 126 | 11.19 |

Table 2

| Simulation Results of worst-case analysis **with 6 connectors** **TBD** | | | | |
|---|---|---|---|---|
| Length[m] | Pair with minimum current [mA] | Pair with maximum current [mA] | Idiff=Max-Min [mA] | P2PCRunb [%] |
| 0.15m | | | | |
| 1 | | | | |
| 10 | | | | |
| 100 | | | | |

Table 3

# Summary of open/closed issues -1

P=priority. P=1:Required for generating baseline draft numbers. P=2: May be part of informative section. P=3: Nice to know.

| # | Subject | Reference/Conclusions | Status | P |
|---|---|---|---|---|
| 1 | Model for simulations/calculations | Figure 1 | Ad-hoc OK. | 1 |
| 2 | Worst case data base | Table 1 | Ad-hoc OK. | 1 |
| 3 | Cable Channel P2PRUNB 5% max | Meeting #1 | Ad-hoc OK. | 1 |
| 4 | Worst case End to End Channel P2P resistance/current unbalance results with 4 connectors | Table 2 | Ad-hoc OK. | 1 |
| 5 | What is the equation to calculate Resistance unbalance and Current unbalance? | Physic's, Meeting #1 and 2. Annex a, A1<br>Iunb=Runb*Total load current. | Ad-hoc OK | 1 |
| 6 | sensitivity Analysis to identify the main contributors of lesser power delivery. | Table 4 and 5 | Ad-hoc OK | 3 |
| 7 | Do we need to specify minimum length? | Meeting #2. See Wayne proposal for 4 channel length options | Ad-hoc OK | 1 |
| 8 | To define PSE PI P2PRUNB | Meeting #1 and 2 | Ad-hoc OK | 1 |
| 9 | To define PD PI P2PRUNB | Meeting #1 and 2 | Ad-hoc OK | 1 |
| 10 | To set equation for evaluation maximum current unbalance through transformers | Ibias=Iunbalance/2=CP2PRU*Icable_max | Ad-hoc OK | 2 |
| 11 | To considering 100BaseT Ethernet devices or switches that do not implement transformers on the spare pairs so the range should be 0 Ohm to 130mOhm.<br>•In the switch and PD, vendors will have to add equivalent resistor to compensate the PSE PI unbalance | Group response: This is implementation issue of PSE PD which needs to meet P2P channel resistance unbalance anyway. | Ad-hoc OK. | 2 |

# Summary of open/closed issues -2

P=priority. P=1:Required for generating baseline draft numbers. P=2: May be part of informative section. P=3: Nice to know.

| # | Subject | Reference/Conclusions | Status | P |
|---|---|---|---|---|
| 12 | How the constant power model at the PD helps us in regard to Channel P2PRUNB and specifically its effect on transformers? | Drawing 2. See the whole slide for details. | Ad-hoc OK. | 1 |
| 13 | sensitivity Analysis to identify the main contributors of resistance unbalance | Need to be done. | On going | 1 |
| 14 | Worst case End to End Channel P2P resistance/current unbalance results with 6 connectors | Table 3 | On going | 1 |
| 15 | Statistical analysis results based on worst case data base in Table 1. Do we need to do it or we can live with worst case analysis? | | On going | 1 |
| 16 | Channel P2PRUNB vs. operating temperature | Meeting #2 and #3.<br>>room temperature: We don't care.<br>Room temperature important for the standard.<br><Room temperature: Informative but not part of the standard | ???? | 1 |
| 17 | How connector contact aging will affect the results i.e. if min/max contact resistance difference will be increased | Meeting #1 | ??? | 1 |
| 18 | Consider analyzing P2P current imbalance higher category cables than CAT6A. | Meeting #1<br>Response was: what will be the end of it? When to stop? | ??? | 1 |

# Summary of open/closed issues -3

P=priority. P=1:Required for generating baseline draft numbers. P=2: May be part of informative section. P=3: Nice to know.

| # | Subject | Reference/Conclusions | Status | P |
|---|---|---|---|---|
| 19 | What is the load current that below it we don't care about Channel, PD PI and PSE PI P2PRUNB | Meeting #2 and 3 | ??? | 1 |
| 20 | What is the minimum resistance in the channel that above it, we don't care about END TO END CHANNEL P2PRUNB? | Meeting #2 | | 2 |
| 21 | What is the wire resistance per meter for patch cords? | Meeting #2 and 3.<br>Proposed 0.14Ω/m | ???? | 1 |
| 22 | To generate worst case analysis curve of maximum pair current vs cable length for Type 3 PD (51W max.) | Drawing 2. See the whole slide for details. | On going. | 1 |
| 23 | To investigate worst case results the 4 options proposed by Wayne | Summary of 2nd meeting. | On going. | 2 |

- Previous Meeting Material

# Meeting # 1 Attendees (Monday Feb 17,2014)

- Yan Zhuang / Huawei
- Abramson David / TI
- Kousalya Balasubramanian/ Cisco
- Leonard Stencel / Bourns
- Larsen Wayne / Commscope
- Woudenberg Rob / Philips
- Picard Jean / TI
- Steinke Stephan / Molex
- George Zimmerman / CME Consulting / Commscope
- Sesha Panguluri/Broadcom
- Ken Bennett/ Sifos

- Gaoling Zou / Maxim
- Dave Dwelley / LT
- Lennart Yseboodt / Philips
- Wendt, Matthias / Philips
- Christian Beia / ST
- David Law / Hp

# Meeting # 2 Attendees (Monday Feb 24,2014)

- Yan Zhuang / Huawei
- Kousalya Balasubramanian/ Cisco
- Leonard Stencel / Bourns
- Larsen Wayne / Commscope
- Ken Bennett/ Sifos
- Dave Dwelley / LT
- Jeff Heath / LT
- Christian Beia / ST
- Steinke Stephan / Molex
- George Zimmerman / CME
- Victor Renteria/BEL
- Abramson David / TI
- Gaoling Zou / Maxim
- Tremblay David/ HP
- Lennart Yseboodt / Philips
- Rob Woudenberg / Philips

# Summary of previous work and conclusions -1

**Cable** pair to pair resistance unbalance (P2PRU)

- In order to specify the ***pair to pair channel resistance imbalance*** we had to know the channel ***components pair to pair*** resistance unbalance such as:
  - Cable (not defined by cabling vendors),
  - Connectors, (Specified but not represents worst case numbers)
  - Transformers, (Vendors data is available. Not part of the formal channel)
  - PSE output resistance (Vendors data is available. Not part of the formal channel)
  - PD input resistance (Vendor data is available, Not part of the formal channel)
- We have good and sufficient data for all the components except the cable.
- We developed a method that predicted the cable Pair to Pair resistance imbalance from the other cable parameters such Propagation delay, Skew, wire diameter, wire insulation material and other.
- The predictions showed that P2P Cable Resistance Unbalance <5%
- Lab Tests confirmed that it was <5%
- Long list of experts (including cable experts) agree with the conclusions.
- All details can be found in: http://www.ieee802.org/3/4PPOE/public/nov13/darshan_01_1113.pdf

# Summary of previous work and conclusions -2

## **Channel** pair to pair resistance unbalance (C_P2PRU)

- Initial Work to determine channel pair to pair resistance unbalance:
  - http://grouper.ieee.org/groups/802/3/4PPOE/public/jul13/beia_1_0713.pdf
  - http://grouper.ieee.org/groups/802/3/4PPOE/public/jul13/darshan_2_0713.pdf

- After getting comments from the group and using same worst-case data base and model:
  - http://www.ieee802.org/3/4PPOE/public/nov13/darshan_03_1113.pdf
  - http://www.ieee802.org/3/4PPOE/public/nov13/beia_01_1113.pdf

  - General Channel Model and its components that we have used: See next slide.

# Summary of previous work and conclusions -3

## General Channel Model and its components that we have used.

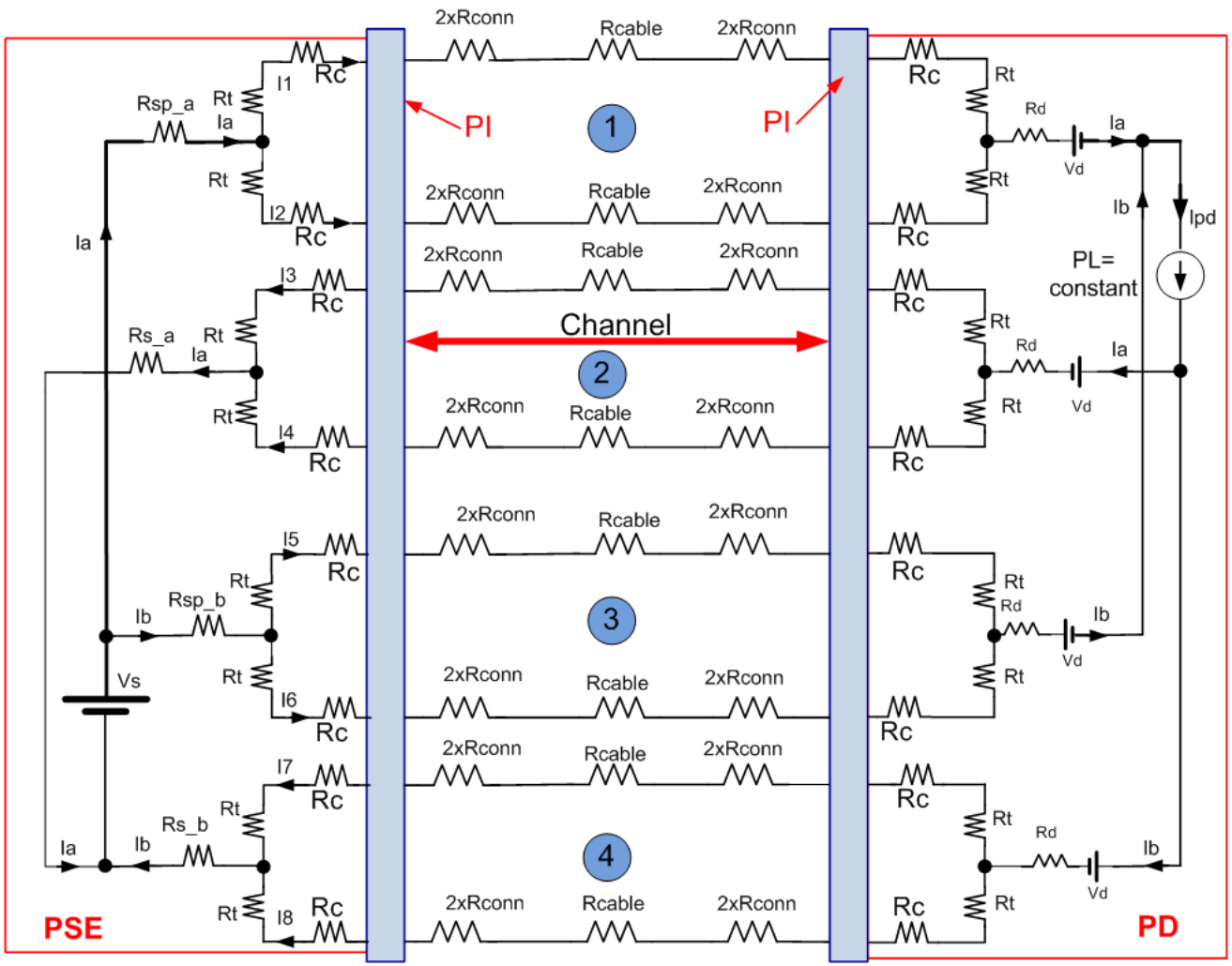


Drawing 1

Notes for the general Model:

1. Adding resistors on positive path for general model (Rsp_a and Rsp_b). It can be set to zero or >zero pending the case being investigated.
2. Adding equipment connectors per Wayne's comment. So total end to end channel connectors is 6 max.
3. The formal channel definition is marked in red arrow.
4. Our work addresses also the internal application resistance of known components that are used

# Summary of previous work and conclusions -4

## Data set that we use as worst case numbers

From: http://www.ieee802.org/3/4PPOE/public/nov13/beia_01_1113.pdf

| **Table 1** | **Data set 1 (Max Cable resistivity)** | **Data set 2 (Min Cable resistivity)** |
|---|---|---|
| Cable resistivity | 117mOhm/m* (maximum value) (CAT5e)<br>Pair resistance unbalance: 2%<br>➔ Minimum wire resistance=0.98*117mΩ/m<br>Pair to pair resistance unbalance: 5%<br>➔ Pair resistance max=~(117mΩ/m)/2<br>➔ Pair resistance min=~(0.95*117mΩ/m)2 | 66mOhm/m* (CAT6A)<br>Pair resistance unbalance: 2%<br>➔ Minimum wire resistance=0.98*66mΩ/m<br>Pair to pair resistance unbalance: 5%<br>➔ Pair resistance max=~(66mΩ/m)/2<br>➔ Pair resistance min=~(0.95*66mΩ/m)2 |
| Transformer winding resistance | 120mOhm min, 130mOhm max | 120mOhm min, 130mOhm max |
| Contact resistance | 30mOhm min, **<br>60mOhm max | 30mOhm min, **<br>60mOhm max |
| Diode bridge | 0.39V+0.25Ohm*Id min;<br>0.53V+0.25Ohm*id max | 0.39V+0.25Ohm*Id min;<br>0.53V+0.25Ohm*id max |
| PSE output resistance (e.g. Rs_a/b= Rsense+Rdson) | 0.25+0.1 Ohm min<br>0.25+0.2 Ohm max | 0.1+0.05 Ohm min<br>0.1+0.1 Ohm max |

- Two scenarios have been identified: max wire resistivity Data set 1 (CAT5E cables) and min wire resistivity Data set 2 (CAT6/A cables)
- *Cable pair to pair resistance max unbalance is set to 5%. See darshan_1_1113.pdf. Cable resistance within pair unbalance is max 2%.
- **Connector contact aging will be addressed in other work.
- All parameters are at room temperature and further study is required to address temperature variations

# Summary of previous work and conclusions -5

## Simulation Results

- Results for Table 1 right column data number set (minimum resistivity cable Type).
- Pairs were not limited to 0.6A
- Numbers were taken from the pairs with highest and lowest values.
- The model that was simulated is with 4 connectors only as in the link below.
  - http://www.ieee802.org/3/4PPOE/public/nov13/darshan_03_1113.pdf

| Simulation Results of worst-case analysis | | | | |
|---|---|---|---|---|
| Length[m] | Pair with minimum current [mA] | Pair with maximum current [mA] | Idiff=Max-Min [mA] | P2PCRunb [%] |
| 1 | 385 | 659 | 275 | 26.30 |
| 10 | 415 | 636 | 221 | 21.04 |
| 100 | 500 | 626 | 126 | 11.19 |

Table 2

$$P2PCRUNB = \frac{\mathrm{Im}ax - \mathrm{Im}in}{\mathrm{Im}ax + \mathrm{Im}in}$$

# Summary of previous work and conclusions -6

- See details: http://www.ieee802.org/3/4PPOE/public/nov13/beia_01_1113.pdf
- What we did was a We need to do the work for sensitivity analysis for channel pair to pair resistance unbalance regardless of power delivery constrains.

| Max res scenario | Component UNB[±] | Effect on power delivery [-] | | |
|---|---|---|---|---|
| Cable lenght | | 1m | 10m | 100m |
| Rt | 4% | 0.17% | 0.10% | 0.01% |
| Rconn | 33.30% | 1.02% | 0.58% | 0.08% |
| r_cable | 5% | 0.20% | 1.13% | **1.68%** |
| Rdiode | 11.10% | 3.43% | 1.96% | 0.32% |
| Vdiode | 14.30% | **5.72%** | **3.27%** | 0.53% |

Table 4

| Min res scenario | Component UNB[±] | Effect on power delivery [-] | | |
|---|---|---|---|---|
| Cable lenght | | 1m | 10m | 100m |
| Rt | 4% | 0.18% | 0.12% | 0.03% |
| Rconn | 33.30% | 1.06% | 0.73% | 0.16% |
| r_cable | 5% | 0.12% | 0.81% | **1.79%** |
| Rdiode | 11.10% | 3.56% | 2.48% | 0.57% |
| Vdiode | 14.30% | **5.94%** | **4.14%** | 0.96% |

Table 5

# Summary of previous work and conclusions -7

## Conclusions

- See details: http://www.ieee802.org/3/4PPOE/public/nov13/beia_01_1113.pdf

- Main conclusions relevant for channel pair to pair resistance unbalance (short summary)
- P2P current imbalance increases when cable length decreases.
- P2P current imbalance increases when cable resistivity decreases i.e. CAT6A will have higher current imbalance compared to CAT5e.
- Unbalance within a pair (the famous 2% pair and 3% channel) has negligible effect on P2P unbalance.
- We need to define the requirements for P2PRunb for the PD, Channel and PSE in order to meet our objectives.

# Summary of previous work and conclusions -8

## Conclusions

- To analyzed the following scenarios:
  - How connector contact aging will affect the results i.e. if min/max contact resistance difference will be increased.
  - The current unbalance results as function of operating temperature range
  - To analyze the results when there is no hard limit of 600mA on the negative pair. Done: See Table 2 and see: http://www.ieee802.org/3/4PPOE/public/nov13/darshan_03_1113.pdf
  - Consider analyzing P2P current imbalance higher category cables than CAT6A
    - Response at the meeting was: what will be the end of it? When to stop?
  - To perform sensitivity analysis for P2P resistance (current) imbalance.
  - To set a worst case conditions for evaluating maximum current imbalance through transformers.

Done: Ibias=Iunbalance/2=CP2PRU*Icable_max.

# What are the parameters that must be define?

- As done in IEEE802.3-2012 *(See Annex A)* when we define the pair (wire to wire in the same pair) in the cable pair(s) and in the channel, we need to do it for the Pair to Pair Resistance Unbalance in the cable and in the channel.

- Cable Pair to Pair Resistance Unbalance (P2PRU)
  - Based on the work done at http://www.ieee802.org/3/4PPOE/public/nov13/darshan_01_1113.pdf , it is proposed to specify it to 5% until formal number will be received from TIA/EIA. (group OK with recommendation)

- Channel Pair to Pair Resistance Unbalance (C_P2PRU)
  - We need to decide if we can work with the worst case numbers? Or we need to add the probability factors to lower them.
    - To add probability factors and move on (request from magnetic vendors for lowest number).

# Analysis Methods and Data-Base

- Analysis Method
  - Worst-Case Analysis
    - We did a worst-case analysis for the channel pair to pair resistance unbalance on a proposed worst-case data
    - Any comments on the worst-case data base?
      - To considering 100BaseT Ethernet devices or switches that do not implement transformers on the spare pairs so the range should be 0 Ohm to 130mOhm.
        - In the switch and PD vendor will have to add equivalent resistor to compensate the PSE PI unbalance. To discuss this approach.
      - Group response: This is implementation issue of PSE PD which needs to meet P2P channel resistance unbalance anyway.
      - Any comments on the model used (Group response: No.)
- Next Steps

# Do we need to specify PSE and PD PI P2P Resistance Unbalance or leave it to be implementation specific as long as C_P2PRU is met?

- Do we need to specify the following additional parameters or leave it to be implementation specific as long as C_P2PRU is met?
  - PSE PI Pair to Pair Resistance Unbalance (PSE_P2PRU)
  - PD PI Pair to Pair Resistance Unbalance (PSE_P2PRU)
  - In the current standard the pair resistance unbalance was defined to 2% and the channel (cable and connector only) to 3% (See Annex A).
  - It was the responsibility of the equipment vendor to make sure that his design will meet all system requirement based on the above specification.
  - In 802.3at extensive work was done and shows that the actual pair channel resistance unbalance is higher than 3% (due to other components in the system) and yet system vendors and components ensure operation under this conditions.
  - Now we are addressing the P2P channel Resistance Unbalance and we have the same question: Do we need to specify the following additional parameters or leave it to be implementation specific as long as C_P2PRU is met?
    - If we do want to define PSE_P2PRU and PD_P2PRU.
    - Should we define only PD_P2PRU since it is not always required for the PD (it is PD power dependent and if defined at PSE it will be required for every port

# Discussions and conclusions

- To ask magnetic component vendors if they can handle the worst-case analysis numbers or we should do statistical analysis as well.
  - If they can, we  use the results to define the end to end channel P2P resistance unbalance.
- To define 3 new parameters
  - (1) To define the channel (PI to PI) Resistance unbalance (cables and connectors) with the contributions of PSE and PD PI P2P Resistance Unbalance.
- From (1) to separately define
  - PSE PI P2PRUNB and PD P2PRUNB
  - To define the channel (PI to PI) Resistance unbalance (cables and connectors).
  - As a result component and system vendors could use it for designing their components.
- We accept that P2P Cable Resistance Unbalance is 5% until formal number will be received by TIA/EIA etc.
- Yair to work with transformer vendors to get the data we need.
- To look for the best cable (lower resistance per meter) expected in the next 10+years and use it in our worst case data base numbers.
- To verify that LDO is covered by PD constant power sink. Done. It is covered.
- To consider 100BaseT Ethernet devices or switches that do not implement transformers on the spare pairs so the range should be 0 Ohm to 130mOhm.
  - In the switch and PD vendor will have to add equivalent resistor to compensate the PSE PI unbalance. To discuss this approach.
- No other comments on previous work done nor on model or database used.
- Group to send comments on model and data base and we will update it if found.

# For next meeting -1

- To discuss the advantages that PD constant Power Sink allows us.
- Background material for considering:
  - Worst case End to End Channel Pair to Pair Channel Resistance Unbalance is at short cable (<100m).
  - At short cables PD voltage is higher that at 100m channel length and pair/port current is lower
  - Not only that the port current is lower, it is <600mA for Type 3 systems below TBD channel length.
  - As a result, P2PCRUNB is not an issue.
  - At 100m the P2PCRUNB is much smaller than at short channel
  - Resulting with less significant contribution to Ibias due to P2PCRUNB and as a result to OCL.
  - **This approach was validated in:** http://grouper.ieee.org/groups/802/3/4PPOE/public/jul13/darshan_2_0713.pdf and requires further investigation for completing this work.

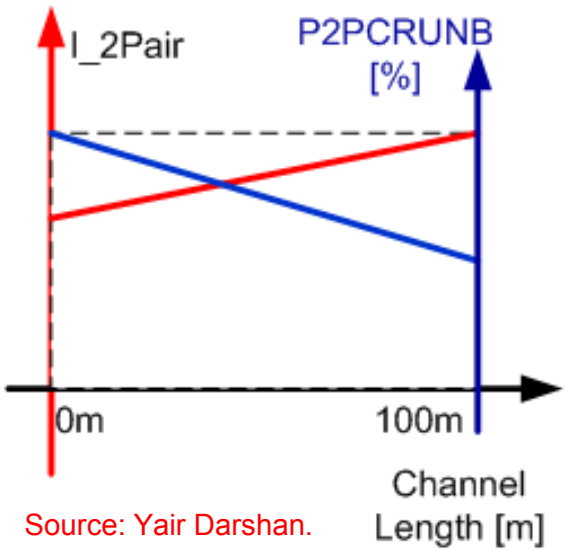


Source: Yair Darshan.

**Source:**
1. See link above, from July 2013.
2. Adhoc meeting #2, February 24, 2014.

Illustration of the behavior.
(The curve is not linear. It is just describing the trend.)

Drawing 2

# For next meeting -2

- We need to define the PD load current on Mode A and Mode B in which below that current, P2P requirements can be ignored.
  - Example: if Mode A requires 350mA and Mode B require 113mA than P2P discussion is not relevant to this case.

# PSE_PI Pair to Pair Resistance Unbalance

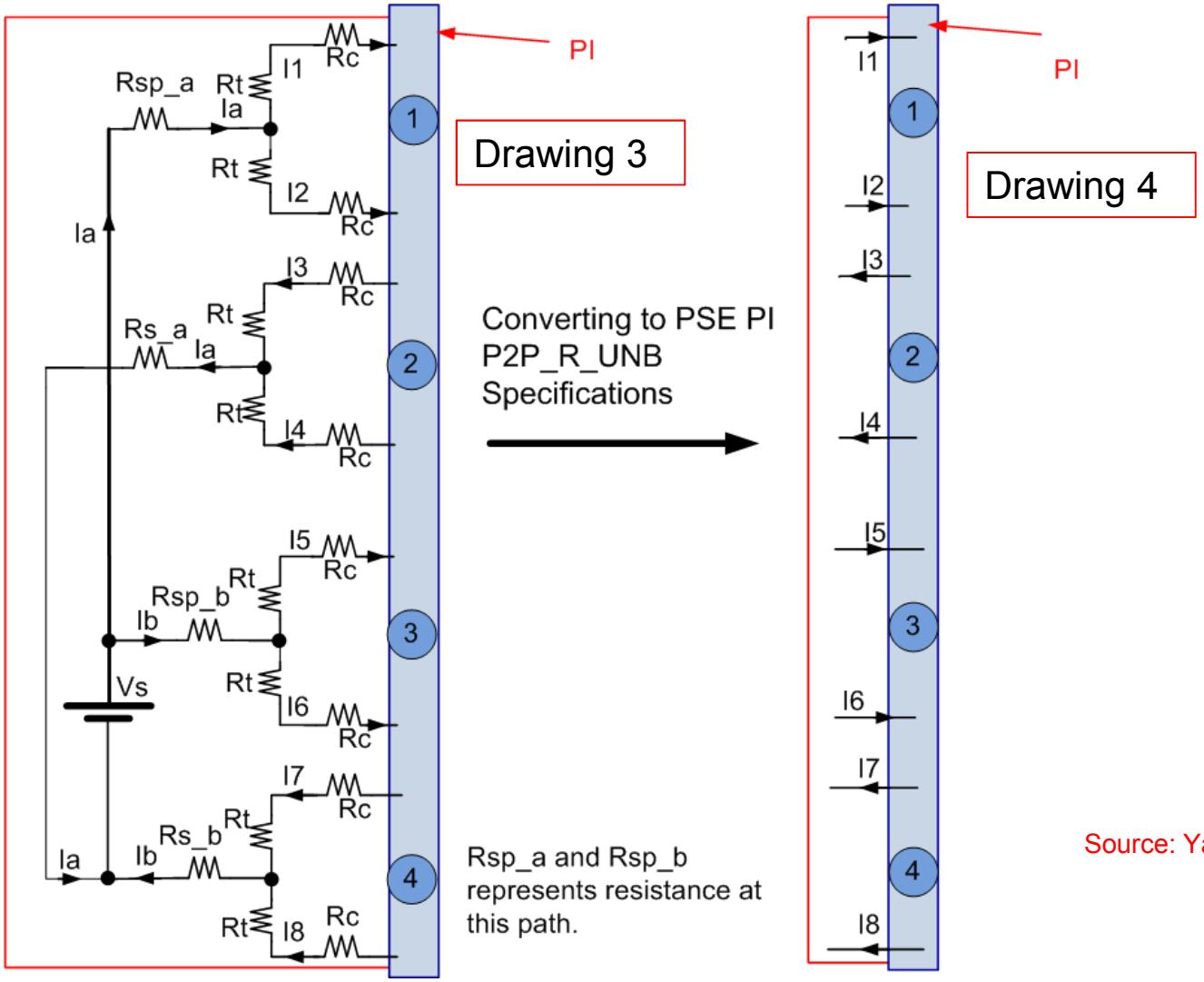


Source: Yair Darshan.

- To specify test setup as well

# PD_PI Pair to Pair Resistance Unbalance

- Same concept for PD PI  P2P_R_UNB definitions
- To specify test setup
- We may need to define P2P voltage offset difference in addition to P2P resistance unbalance

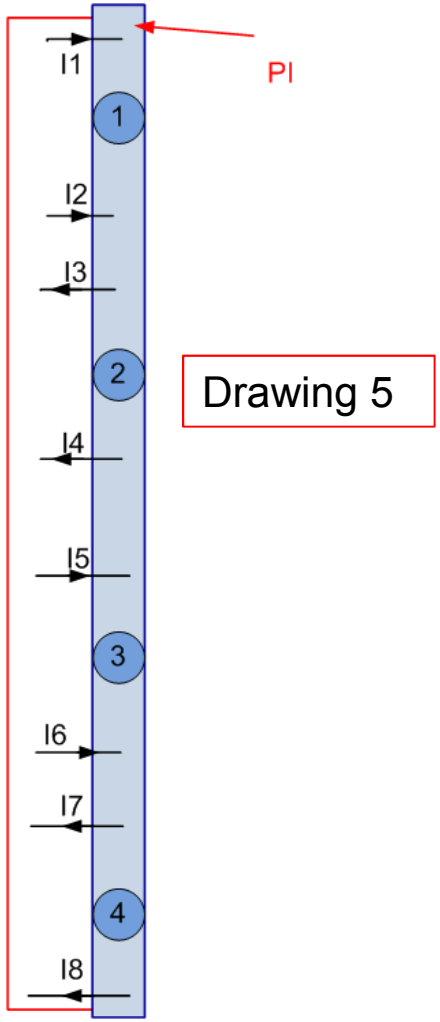


Source: Yair Darshan.

# Summary of 2nd meeting - 1

- (Text marked blue was added after the meeting and is not part of the meeting summary. It will be discussed on our 3rd meeting to be approved.)
- Wayne Larsen present data regarding:
  - Summary of resistivity and resistance unbalance specifications in TIA cabling standards
  - **Suggested topologies to study**
    - A. 6 inch (0.15 m) of cordage, no connectors.
    - B. 4 m channel with 1 m of cordage, 3 m of cable, 2 connectors
    - C. 23 m channel with 8 m of cordage, 15 m cable, 4 connectors
    - D. 100 m channel with 10 m of cordage, 90 m of cable, 4 connectors
  - Calculated channel resistance and unbalance (not including PSE and PD components) for the above topologies and the calculation details in separate Excel file done for maximum TIA numbers.
- Yair notes for the calculation results
  - The results reflects maximum cable (9.38Ω/100m) and connectors (300mΩ) resistance specified by TIA. *We are looking for lower cable resistance and connectors to reflect real life and also worst case in terms of P2PCRUB.*
  - *Christian and Yair proposed to use cable with* 66mOhm/m and connectors with 30mOhm min, 60mOhm max per the data in slide 9.
  - Proposed channel length options to investigate looks reasonable.

# Summary of 2nd meeting - 2

- We review the updated model and we agree to use it as our base line for simulating different operation scenarios.
- Until other worst case numbers regarding cables and other components in the channel from end to end, we will use the numbers in the table slide 9, minimum resistivity cable model column.
- We adopt the 5% cable P2PRUNB until formal number will be received from TIA/EIA etc.
- We add two additional connectors to the model to investigate the effect of it on the end to end P2PCRUNB.

  (formal channel is 4 connectors maximum)
- To consider 100BaseT Ethernet devices or switches that do not implement transformers on the spare pairs so the range should be 0 Ohm to 130mOhm.
  - Yair note: In the Switch/Midspan and PD vendors will have to add equivalent resistor to compensate the PSE PI unbalance.
  - Group: This is implementation issue of PSE PD which needs to meet P2P channel resistance unbalance anyway. We will craft the optimum wording when the time comes.

# Summary of 2nd meeting - 3

- The following questions and issues were raised
- (1) What is the minimum resistance in the channel that above it, we don't care? In other words, what is the minimum resistance in the PD that makes the diodes, connectors, transformers less important in the total channel P2PRUNB?
- (2) Do we need to specify minimum length?.

  Yair: we will know the answer based on (1) and running simulations/calculations per Wayne proposal for 4 channel length options.
- What will be minimum Ω/m for patch cords?
- Yair: I suggest to use the 9.38Ω/100m (93.8mΩ/m as max value and 5% less as the minimum value since patch cords normally need to be flexible than the horizontal cable so their wire diameter is smaller that horizontal cables such as CAT6A.
- Yair: I remember that Wayne said that the 0.15m channel length option is with 14 Ω/100m.

  -Wayne to confirm.

  -Wayne: What is your opinion to the above proposal?

# Summary of 2nd meeting - 4

- We need to define the PD load current on Mode A and Mode B in which below that current, P2P requirements can be ignored.
  - Example: if Mode A requires 350mA and Mode B require 113mA than P2P discussion is not relevant to this case.
- We agree that wee need to investigate it and address it.
- **Dave Dwelley made a comment about this issue which I didn't record.**
- **Dave please send us your comment about this topic to be recorded and addressed.**

- We need to conduct sensitivity analysis for P2PCRUNB with constant power sink and without limitations on current per pair. What we had is for determining the PD minimum available power.

# Summary of 2nd meeting - 5

- How to address temperature effect on P2PCRUNB?
  - We agree that we don't care of high temperature since it works for us (high temperature higher resistance lower P2PCRUNB)
  - So the question is narrowed to below room temperature (20-24°C)?.

Yair:

1. All parameters in the standard are tested for compliance at room temperature. (to confirm)
2. System and component vendors are responsible to design the parts/system to meet their spec over their spec operating temperature range.
3. We can study and supply the guidelines/equations in informative annex to help decide what to do in temperatures below room temperature but it can't be part of the standard.
4. Please see what IEEE802.3-2012 says about this topic:

**33.7.7 Temperature and humidity**

The PD and PSE powered cabling link segment is expected to operate over a reasonable range of environmental conditions related to temperature, humidity, and physical handling. Specific requirements and values for these parameters are beyond the scope of this standard.